Overview

HP ZBook 15 Mobile Workstation

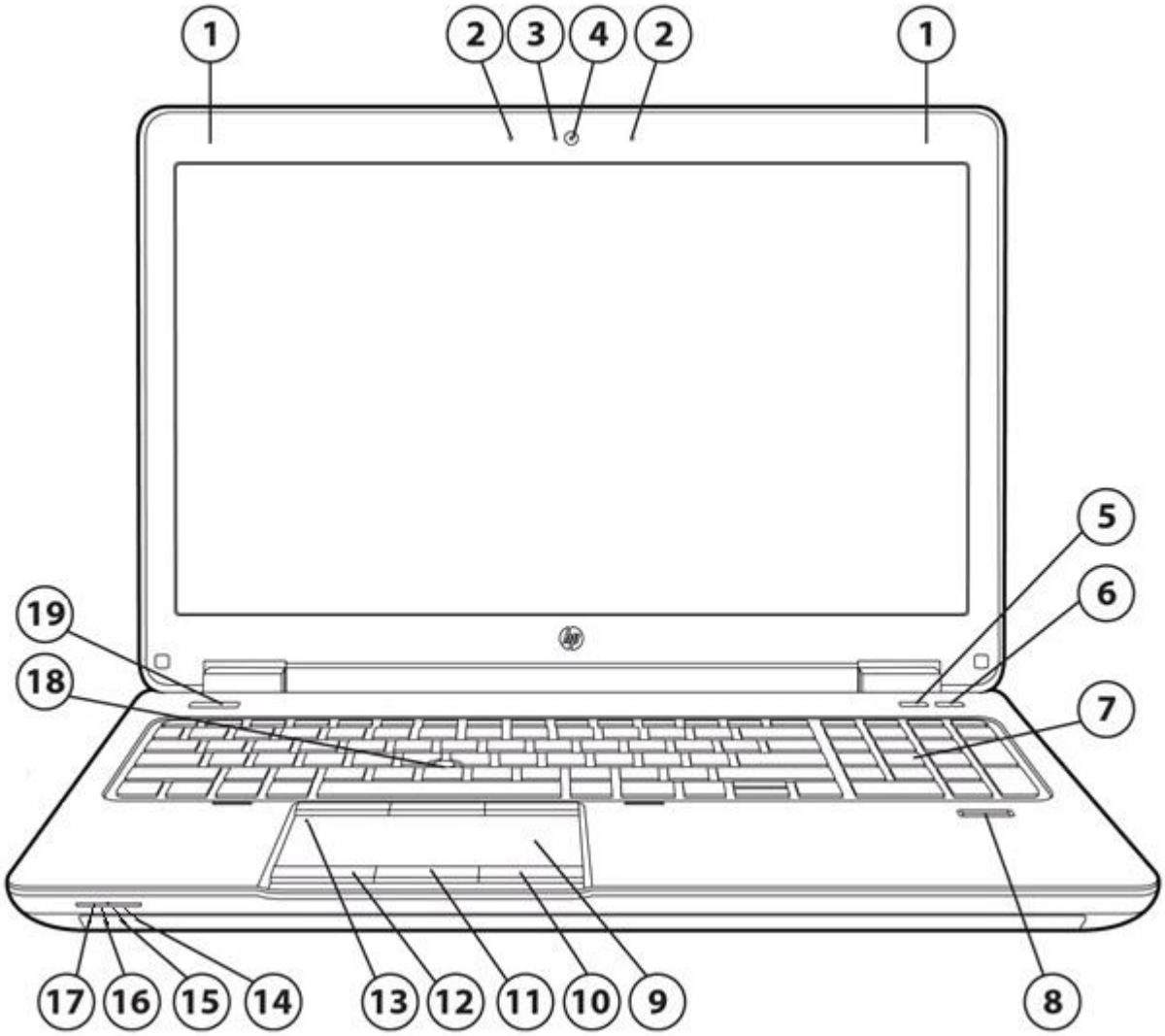

1. WLAN antennas (2)
2. Internal microphones (2)
3. Webcam light (with webcam)
4. Webcam
5. Wireless button
6. Volume mute button
7. Numeric keypad
8. Fingerprint reader (select models only)
9. Touchpad with scroll zone
10. Right Touchpad button
11. Center Touchpad button
12. Left Touchpad button
13. Touchpad on/off button with LED
14. Hard drive light
15. AC adapter/Battery light
16. Power light
17. Wireless light
18. Pointstick
19. Power button

Overview

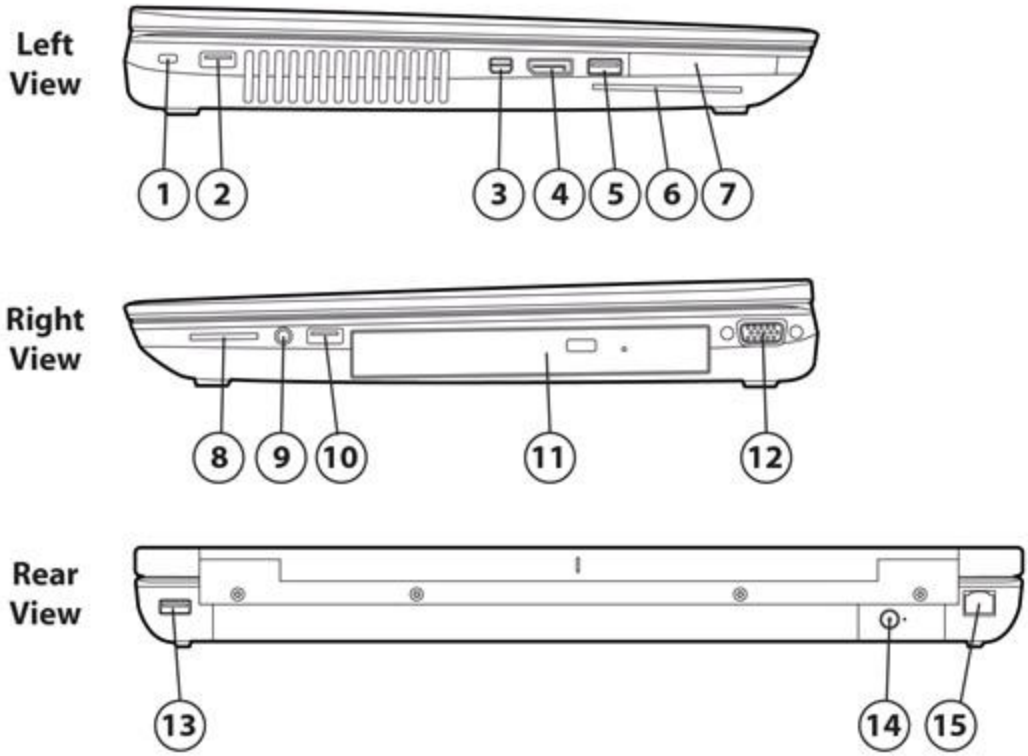

1. Security cable slot
2. USB 2.0 port
3. Thunderbolt port
4. DisplayPort
5. USB 3.0 charging port
6. Smart card reader
7. ExpressCard port
8. Memory card reader
9. Audio-out (headphone) jack/Audio in (microphone) jack
10. USB 3.0 port
11. Optical drive (select models only)
12. External monitor port
13. USB 3.0 port
14. Power connector
15. RJ-45 (network) jack/lights (2)

At A Glance

- Windows 8 versions, Windows 7 versions, SuSE Linux, or FreeDOS
- All new, thinner and lighter form factor and industrial design for 2013. Durable HP Duracase with magnesium-reinforced chassis, HP DuraFinish with brushed aluminum on top cover and smooth aluminum around top, right, and left sides chassis with hematite /graphite color, HP DisplaySafe frame, latch-less design with precision aluminum-alloy hinges, backlight keyboard in full aluminum deck, chemically strengthened glass touchpad, and updated system functions indicators
- Designed to meet the military standard Mil-Std-810G for drop, vibration, shock, high temperature, low temperature, temperature shock, dust, altitude, and humidity
- Workstation-caliber NVIDIA® Quadro® discrete graphics: NVIDIA Quadro K610M (1GB GDDR5), NVIDIA Quadro K1100M (2GB GDDR5), NVIDIA Quadro K2100M (2GB GDDR5); NVIDIA Optimus technology[1] enabled for improved battery life.
- ISV certified to provide fast and reliable performance with workstation applications, including manipulation of 3D textures
- Choice of 4th generation Intel® Core™ i7 and i5 processors
- Intel Core i7 with vPro and Core i5 with vPro technology (optional)
- Intel Smart Response Technology support for higher system performance with a hard drive
- HP Performance Advisor for optimal configuration, compatibility and performance
- Up to four SODIMMs on configurations with quad-core processor, for system memory up to 32 GB

Overview

- Supports multi-display, including up to four without a docking station (both with and without hybrid graphics enabled), up to four with HP Advanced Docking Station (sold separately)without hybrid graphics enabled and up to five with HP Advanced Docking Station (sold separately) and hybrid graphics enabled
- New Thunderbolt port for high speed data/video/audio transfer support
- Thunderbolt port can be connected to monitors supporting DisplayPort 1.2 to achieve HBR2 and MST functionality.
- DTS Studio Sound HD audio optimized for high fidelity audio with immersive surround sound with deep, rich bass and crystal clear dialog without distortion at high volume
- Choice of battery solutions: 8-cell (83 WHr) or 8-cell (75 WHr) HP Long Life Battery, combined with optional external batteries for extended life.
- 2 discrete buttons with LED indicator for convenient one touch access - Wireless On/Off, Volume Mute
- Widescreen 15.6-inch diagonal anti-glare LED-backlit display:
  HD (1920x1080) eDP with standard viewing angle, FHD (1920x1080) eDP with PSR (Panel Self Refresh) with ultrawide viewing angle, or FHD ultrawide viewing angle with HP DreamColor Technology
- Upgrade Bay for optional second hard drive or weight saver
- Flexible wireless connectivity options:
  - Integrated Intel Centrino® 802.11 ac 2x2 + Bluetooth 4.0 LE, Intel Centrino 802.11 a/b/g/n 2x2 + Bluetooth 4.0 LE, or Intel Centrino a/b/g/n 2x2 wireless LAN module
  - Optional integrated wireless 3G or 4G (LTE) mobile broadband module support
- Choice of tool free capable, user-removable hard drive up to 1 TB with HP 3D DriveGuard protection, or SATA 6 Gb/s 128/180/240/256/512*** GB Solid State Drive or 256 GB SED Solid State Drive
- Security features including HP Client Security Manager, with central management
- Low halogen, ENERGY STAR qualified and EPEAT TBD registered in the U.S. EPEAT status varies by country- please see http://www.epeat.net.
- HP BIOS self-healing technology including HP Sure Start to prevent, detect, and remedy known and unknown BIOS attacks.

NOTE 1: Configurations with the HP DreamColor panel are not available with this feature.

*** Available in October, 2013.

NOTE: See important legal disclosures for all listed specs in their respective features sections.

Features

OPERATING SYSTEM

Preinstalled	Windows 8 Pro 64* Windows 8.1 Pro 64* Windows 7 Professional (available through downgrade rights from Windows 8 Pro)** Windows 7 Professional (available through downgrade rights from Windows 8.1 Pro)** Windows 7 Professional 64* SuSE Linux Enterprise (SLED 11) SP2 64bit FreeDOS
Supported	Windows 8 Enterprise 64* Windows 7 Professional 32/64*** Windows 7 Enterprise 32/64*** Windows 7 Ultimate 32/64*** Windows 8.1 Pro 64* Windows 8.1 Enterprise 64* SuSE Linux Enterprise Desktop 11 SP2 64bit
Certified	SuSE Linux Enterprise Desktop 11 SP2 64bit

* Not all features are available in all editions of Windows 8. Systems may require upgraded and/or separately purchased hardware, drivers and/or software to take full advantage of Windows 8 functionality. See http://www.microsoft.com for details.
** This system is preinstalled with Windows® 7 Pro software and also comes with a license and media for Windows 8 Pro software. You may only use one version of the Windows software at a time. Switching between versions will require you to uninstall one version and install the other version. You must back up all data (files, photos, etc.) before uninstalling and installing operating systems to avoid loss of your data.
*** Not all features are available in all editions of Windows 7. This system may require upgraded and/or separately purchased hardware to take full advantage of Windows 7 functionality. See http://www.microsoft.com/windows/windows-7/ for details.

PROCESSOR*

4th Generation Intel® Core™ i7-4900MQ (2.8 GHz, 1600MHz, 8 MB L3 cache, 4 cores, 47W)*
Up to 3.80 GHz with Intel Turbo Boost Technology
4th Generation Intel® Core™ i7-4800MQ (2.7 GHz, 1600MHz, 6 MB L3 cache, 4 cores, 47W)*
Up to 3.70 GHz with Intel Turbo Boost Technology
4th Generation Intel® Core™ i7-4700MQ (2.4 GHz, 1600MHz, 6 MB L3 cache, 4 cores, 47W) (no vPro support)*
Up to 3.40 GHz with Intel Turbo Boost Technology
4th Generation Intel® Core™ i7-4600M (2.90 GHz, 1600 MHz, 4 MB L3 Cache, 2 cores, 37W)
Up to 3.60 GHz with Intel Turbo Boost Technology
4th Generation Intel® Core™ i5-4330M (2.80 GHz, 1600 MHz, 3 MB L3 Cache, 2 cores, 37W)
Up to 3.50 GHz with Intel Turbo Boost Technology
4th Generation Intel® Core™ i5-4300M (2.60 GHz, 1600 MHz, 3 MB L3 Cache, 4 threads, 37W)
Up to 3.30 GHz with Intel Turbo Boost Technology
4th Generation Intel® Core™ i5-4310M (2.70 GHz, 1600 MHz, 3 MB L3 Cache, 4 threads, 37W)
Up to 3.40 GHz with Intel Turbo Boost Technology

* Multi-Core is designed to improve performance of certain software products. Not all customers or software applications will necessarily benefit from use of this technology. 64-bit computing on Intel® architecture requires a computer system with a processor, chipset, BIOS, operating system, device drivers, and applications enabled for Intel® 64 architecture. Processors will not operate (including 32-bit operation) without an Intel® 64 architecture-enabled BIOS. Performance will vary depending on your hardware and software configurations. Intel's numbering is not a measurement of higher performance.
NOTE: NVIDIA Optimus is enabled by default. If you choose to disable this functionality, Intel® integrated graphics will not be used.

CHIPSET

Features

Mobile Intel® QM87

INTEL CORE I5 WITH VPRO/CORE I7 WITH VPRO TECHNOLOGY CAPABLE

Intel Core i5 with vPro and Core i7 with vPro technology is a selectable feature that is available on units configured with select processors, a qualified Intel Centrino® WLAN module and a preinstalled Windows operating system. It provides advances in remote manageability, security, energy efficient performance, and wireless connectivity. Intel Active Management Technology 9.0 (iAMT) offers built-in manageability and proactive security for networked mobile workstations, even when they are powered off* or when the operating system is inoperable. It can help identify threats before they reach the network, isolate infected systems, and update mobile workstations regardless of their power state.
*Requires a Windows operating system, network hardware and software, connection with a power source, and a direct (non-VPN) corporate network connection which is either cable or wireless LAN.

NOTE: Some functionality of Intel Core i5 with vPro/Core i7 with vPro technology, such as Intel Active Management technology and Intel Virtualization technology, requires additional third- party software in order to run. Availability of future "virtual appliances" applications for Intel Core i5 with vPro/Core i7 with vPro technology is dependent on third- party software providers. Compatibility with future "virtual appliances" is yet to be determined.

GRAPHICS

NVIDIA Quadro K610M with 1 GB dedicated GDDR5 video memory
Microsoft DirectX 11.1 (Shader Model 5.0) and OpenGL 4.2 capable
NVIDIA Quadro K1100M with 2 GB dedicated GDDR5 video memory
Microsoft DirectX 11.1 (Shader Model 5.0) and OpenGL 4.2 capable
NVIDIA Quadro K2100M with 2 GB dedicated GDDR5 video memory
Microsoft DirectX 11.1 (Shader Model 5.0) and OpenGL 4.2 capable

NVIDIA Optimus Technology supported

NOTE: NVIDIA Quadro mobile professional graphics support up to four independent displays when using an HP Advanced Docking station (sold separately) without hybrid graphics enabled, and up to 5 with Hybrid graphics enabled.

DISPLAY

Internal
15.6" diagonal LED-backlit FHD SVA eDP anti-glare (1920 x 1080)
15.6" diagonal LED-backlit FHD UWVA IPS eDP anti-glare + Panel Self Refresh (PSR) (1920 x 1080)
15.6" diagonal RGB LED-backlit FHD DreamColor UWVA IPS eDP anti-glare (1920 x 1080)

External
Up to 32-bit per pixel color depth

Thunderbolt*
Supported as part of the daisy chain connected with Intel approved thunderbolt cables. For additional information, please visit https://thunderbolttechnology.net/.

Thunderbolt Features

- Legacy : DP 1.1a, DVI-A/D, HDMI and VGA displays attached to the end of the thunderbolt daisy chain via Intel certified dongles
- DP 1.2 redrive: DisplayPort monitors capable of supporting DP 1.2 may be directly attached to the Thunderbolt port to achieve HBR2 and MST functionality.
- DP display with miniDP connector may be attached directly to TB (Thunderbolt) port.

Features

- DP display with standard DP connector and other legacy displays (HDMI, DVI, VGA) may be attached to TB with the use of a dongle.
- DP1.2 MST feature ("daisy-chain" feature) is supported through TB port.

* Thunderbolt is new technology. Install all the latest drivers for your Thunderbolt device before connecting the device to the Thunderbolt port. Thunderbolt cable and Thunderbolt device (sold separately) must be compatible with Windows. To determine whether your device is Thunderbolt Certified for Windows, see https://thunderbolttechnology.net/products.

DisplayPort w/MST (Multi-stream Transport)
Supports resolutions up to Full 4K 4096 x 2160, 24/30-bit color depth at 60 Hz, and WUXGA (1920 x 1200) monitors, 24/30-bit color depth at 120 Hz.

DisplayPort Feature

- Multi-stream Transport (MST): Multi-stream Transport is a DP 1.2 feature that allows daisy chaining of DP 1.2 monitors (requires built in support of DP 1.2 MST in monitor), or the use of DP 1.2 hubs with MST to achieve 4 active displays without a docking station.

VGA
Port supports resolutions up to 2048 x 1536 at 75 Hz, and lower resolutions at up to 100 Hz

DVI-D (single link)
Video signal available through DVI port in optional HP Docking Station (sold separately), as well as through DisplayPort to DVI-D; DisplayPort to DVI-D (dual link); and DisplayPort to HDMI adapters.
Supports resolutions up to 1600 x 1200 at both full and reduced blanking, and 1920 x 1200 at reduced blanking

NOTE: Resolutions are dependent upon monitor capability, and resolution and color depth settings.

FLASH CACHE MODULE

Optional mSATA Flash cache module support for Intel Smart Response Technology. (Available only with standard non-SED hard drive. Cannot be combined with any solid state drive.)

STORAGE AND DRIVES

mSATA Storage Bay
128GB mini-card Solid State Drive (coming soon)
(**NOTE:** cannot be combined with the mSATA Flash Cache Module)

Primary Storage Bay

Hard Drives
320/500/750 GB 7200 rpm SMART SATA II
1 TB 5400 rpm SMART SATA II
500 GB 7200 rpm SMART SATA II Self Encrypting Drive
500 GB 5400 rpm SMART SATA II Self Encrypting Drive FIPS 140-2 compliant

HP 3D DriveGuard (Windows only)
The hard drive is mounted directly to the notebook frame, reducing the transmission of shock to the hard drive. Uses three-axis digital motion detection with intelligent sensitivity to help protect the hard drive during normal use from shock and vibration. The digital accelerometer temporarily halts all data transfer and parks the hard drive when abrupt motion is detected.

Features

Solid State Drive
128/180/240/256/512 GB SATA 6 Gb/sec
256 GB SATA 6 Gb/sec Self Encrypting Drive
512 GB SSD opal 2

NOTE: For hard drives, GB = 1 billion bytes. TB = 1 trillion bytes. Actual formatted capacity is less. Up to 16 GB (for Windows 7) of system and up to 30 GB (for Windows 8) disk is reserved for system recovery software.

OPTICAL DRIVES

Fixed 9.5 mm SATA optical drive
Blu-ray R/RE DVD+/-RW SuperMulti DL Drive
Blu-ray ROM DVD+/-RW SuperMulti DL Drive
DVD+/-RW SuperMulti DL Drive
DVD-ROM Drive

Second hard drive
750 GB 7200 rpm SMART SATA II Hard Drive
512 GB SATA 6 Gb/sec Solid Sate Drive
256 GB SATA 6 Gb/sec Self Encrypting Drive
RAID 0 and 1 supported

Weight saver

MEMORY

Standard
DDR3L 1.35V SDRAM (1600MT/s)
Two SODIMM slots (Dual-core processor) or four SODIMM slots (Quad-core processor) supporting dual-channel memory
2 GB, 4 GB, and 8 GB SODIMMs

Maximum
Upgradeable to 16384 MB with optional 8192 MB SODIMMs in both slots (Dual-core processor)
Upgradeable to 32768 MB with optional 8192 MB SODIMMs in all 4 slots (Quad-core processor)

Dual-channel
Maximized dual-channel performance requires SODIMMs of the same size and speed in both memory slots.

NOTE: Due to the non-industry standard nature of some third-party memory modules, we recommend HP branded memory to ensure compatibility. If you mix memory speeds, the system will perform at the lower memory speed. With Windows Starter 32-bit operating systems, the amount of usable memory is dependent upon your configuration, so that above 3 GB all memory may not be available due to system resource requirements.

NETWORKING/COMMUNICATIONS

Wireless
Support for a broad range of secure, integrated wireless LAN and wireless WAN options featuring support for the latest industry standards. Broadband Wireless (WWAN) requires a Windows operating system and is available in select countries as a standard, factory configurable feature only. Integrated Bluetooth is also available (factory configurable only) and can be combined with any of the supported wireless LAN and wireless WAN options.

Mobile Broadband options

HP hs3110 HSPA+ Mobile Broadband Module*
HP lt4111 LTE/EV-DO/HSPA+ Gobi4G Module*

Features

HP lt4112 LTE/HSPA+Gobi4G Module (EMEA,APJ)*

All 802.11 integrated wireless LAN options

Intel Dual Band Wireless-AC 7260 802.11 ac (2x2) + Bluetooth 4.0 LE Combo
Intel Dual Band Wireless-N 7260AN 802.11 a/b/g/n (2x2) WiFi + Bluetooth 4.0 Combo
Intel Centrino® Advanced-N 6235 802.11 a/b/g/n (2x2) + Bluetooth 4.0 LE Combo
Intel Centrino® Advanced-N 6205 802.11 a/b/g/n (2x2)

Intel WiDi

Intel WiDi Software***

Communications

Integrated Integrated Intel I217-LM Gigabit** Network Connection (vPro configurations)
* Wireless use requires separately purchased service contract. Check with your local vendor for coverage area and availability in your area. Connection and speeds will vary due to location, environment, network conditions, and other factors. 4G compatibility with HSPA+ and LTE.
** The term "10/100/1000" or "Gigabit" Ethernet indicates compatibility with IEEE standard 802.3ab for Gigabit Ethernet, and does not connote actual operating speed of 1 Gb/s. For high-speed transmission, connection to a Gigabit Ethernet server and network infrastructure is required.
*** Integrated Intel Wi-Di feature is available on select configurations only and requires separately purchased projector, tv or computer monitor with an integrated or external Wi-Di receiver. External Wi-Di receivers connect to the projector, tv or computer monitor via a standard HDMI cable, also sold separately.

NOTE: WWAN is not available with DreamColor displays.

AUDIO/MULTIMEDIA

Audio

DTS Studio Sound HD audio (Windows OS only)
Integrated stereo speakers
Integrated microphone (dual-microphone array when equipped with optional webcam)
Button for volume mute; function keys for volume up and down
Combo mic-in / stereo headphone-out jack

Webcam

Optional 720p HD webcam

- HD format (widescreen)
- Supports videoconferencing and still image capture
- High quality fixed focus lens
- Video capture at various resolutions up to 1280x720 resolution (720p) and up to 30fps
- M-JPEG compression supports higher frame rates for video capture and videoconferencing
- Improved low light sensitivity
- Improved dynamic range

KEYBOARDS/POINTING DEVICES/BUTTONS & FUNCTION KEYS

Keyboard

Optional backlit keyboard with Function key control to toggle backlit brightness setting - off/full/half brightness
The HP spill-resistant keyboard is designed using a thin layer of Mylar film under the keyboard and a drain system that funnels fluid through a hole in the bottom of the notebook. This minimizes the risk of damage to sensitive components underneath. The 101/102-key compatible keyboard features a full-pitch key layout with desktop keyboard features, such as editing keys, both left and right control and alt keys, function keys, and 19.05 x 19.05 mm key pitch (center-to-center

spacing). U.S. and International key layouts are available. Other features include hot keys for instant access to power conservation and brightness.

Pointing Devices
Touchpad with On/Off button, two-way scroll, gestures, three pick buttons
Pointstick with three additional pointstick buttons
Image sensor touchpad for enhanced performance and improved precision on scroll and gesture

Buttons and Function Keys
Separate launch buttons provide easy access to the following features: wireless on/off, volume mute. Function keys provide control of the following features: standby mode, external display, volume down, volume up, HP Power Assistant (Windows 7 only), and display brightness.

SOFTWARE AND SECURITY

Preinstalled Software with Windows Operating System

Windows 8

Security
Absolute Data Protect
Computrace* (removed from UI on activation)
Device Access Manager with Just In Time Authentication
DigitalPersona Fingerprint Driver
Drive Encryption (FIPS 140-2)
HP File Sanitizer (Activated via Wizard)
HP Client Security (incl. Cred Mgr and Password Mgr)
HP SpareKey
HP Trust Circles Standard
Microsoft Defender
Privacy Manager (Web only)
Validity Fingerprint Driver

BIOS Features
Absolute Persistence Module (for all Absolute products)
HP Sure Start
HP Automatic Drive Lock
HP BIOS Protection (Follow NIST 800-147, 155 Guidelines)
HP Disk Sanitizer (Not for SSD)
HP DriveLock
HP SpareKey
Hybrid Boot
Master Record Security (backup/restore)
Measured Boot
Power On Authentication
Pre-Boot Security
Secure Boot
Secure Erase (SSD & HDD)
Update via Network

MultiMedia
Cyberlink Power2Go
Cyberlink PowerDVD

Windows 7

Security
Computrace* (removed from UI on activation)
Device Access Manager with Just In Time Authentication
Drive Encryption (FIPS 140-2)
HP File Sanitizer (Activated via Wizard)
HP Client Security (incl. Cred Mgr and Password Mgr)
HP SpareKey
HP Trust Circles Standard
Microsoft Security Essentials
Privacy Manager (Web only)
Validity Fingerprint Driver

BIOS Features
Absolute Persistence Module (for all Absolute products)
HP Sure Start
HP Automatic Drive Lock
HP BIOS Protection (Follow NIST 800-147, 155 Guidelines)
HP Disk Sanitizer (Not for SSD)
HP DriveLock
HP SpareKey
Hybrid Boot
Master Record Security (backup/restore)
Measured Boot
Power On Authentication
Pre-Boot Security
Secure Boot
Secure Erase (SSD & HDD)
Update via Network

MultiMedia
Cyberlink Power2Go
Cyberlink PowerDVD

Features

Cyberlink YouCam BE

HP Value Add

Digital Energy Star Logo W8
Getting Started with Windows 8
HP 3D DriveGuard
HP ePrint Driver
HP Firmware & Driver Installer
HP Hotkey Support
HP Manageability
HP PageLift App
HP Performance Advisor
HP Quick Start
HP Registration App
HP Remote Graphics
HP Setup
HP Software Setup
HP Support Assistant
HP WallPaper
Internet Explorer 9
Internet Explorer 10
IE Home
System Default Settings for Win8
UEFI System Diagnostics W8
Wireless Button Driver
Amazon Kindle App
PDF Complete, Corporate Edition
Box.Net (UK only)
Box 50GB CMIT Cloud Offer
BTB Host and ISP Stub
BTB Host End Block
Bing Search for IE10
Netflix App
Skype App
Skype RTC Insertion (Windows 8.1)

HP Value Add

HP Ceement
HP 3D DriveGuard
HP ePrint Driver
HP Hotkey Support
HP Manageability
HP PageLift Desktop App
HP Performance Advisor
HP Recovery Manager
HP Remote Graphics
HP Setup
HP Software Setup
HP Support Assistant
HP Recovery Disc Creator (HPRDC)
HP WallPaper
Internet Explorer 9
Internet Explorer 10
IE Home
Wireless Button Driver
Adobe Flash Player (Commercial)
PDF Complete, Corporate Edition
Box.Net (UK only)
Box 50GB CMIT Cloud Offer
BTB Host and ISP Stub
BTB Host End Block
Bing Search for IE9
Bing Search for IE10
Skype Desktop App

Microsoft Products

Buy Office
Lync Optimized

Microsoft Products

Buy Office
Lync Optimized

Additional Software Available from the Web

HP SoftPaq Download Manager
HP Software System Manager
HP Peak Power Manager

Workstation ISV Certifications

See the latest list of certifications at: http://www.hp.com/united-tates/campaigns/workstations/partnerships.html

HP Remote Graphics Software

The remote desktop solution for serious workstation users and their most demanding applications.
Download at: http://www.hp.com/go/RGS

Features

HP Performance Advisor

HP Performance Advisor enables optimal configuration of HP Mobile Workstations delivering stability and best performance. HP Performance Advisor will guide your system setup allowing a "custom" configuration that best matches the workstation to user requirements.
Download at: http://www.hp.com/go/performanceadvisor

HP Recovery Manager

Models shipped with Windows 7 include HP Recovery Manager. HP Recovery Manager enables fast recovery of the factory preinstalled image if the system becomes corrupted or if important system files are accidentally deleted. Up to 36 GB (for Windows 7) of system and up to 36 GB (for Windows 8) disk is reserved for system recovery software.

Security

See Software section above.

Other Standard Security Features

Integrated Smart Card Reader
HP Spare Key (requires initial user setup)
One-Step Logon
Common Criteria EAL4+ Augmented Certified Discrete TPM 1.2 Embedded Security Chip
Security lock slot
Support for Intel AT

Optional Security Features

HP Fingerprint Sensor (optional)
Computrace* with GPS Tracking - Subscription based security solution providing the ability to track, initiate physical recovery, conduct asset management, and perform remote data delete by utilizing GPS technology. GPS functionality requires HP Mobile Broadband Module.
* The Computrace agent is shipped turned off, and must be activated by customers when they purchase a subscription. Subscriptions can be purchased for terms ranging multiple years. Service is limited, check with Absolute for availability outside the U.S.

HP CENTRAL MANAGEMENT

HP offers a variety of scalable hardware, software, and BIOS-based security features to help you defend your organization against viruses and other threats. These integrated security features safeguard what matters to you the most - your data, device and identity. Now, be confident your fleet of devices is protected in multiple layers of HP Client Security protection.

HP BIOS Protection keeps you up and running with enhanced protection against virus attacks and other threats. And if the BIOS is accidently compromised, the auto recovery feature automatically restores it to its fully functional state.

HP Sure Start detects and negates a BIOS attack with automatic recovery of the BIOS even when the installation is accidentally compromised (i.e. power outage). When HP Sure Start heals the BIOS an event log is generated that an IT administrator can retrieve so the business is aware of a BIOS attack. Golden copy of BIOS is stored in protected nonvolatile memory providing redundant, hardware-based protection against a new generation of attacks. This helps to future-proof your technology and business.

An optional fingerprint reader and integrated Smart Card Reader help keep your identity secure. The security cable slot helps keep your notebook physically secure.

HP Drive Encryption+ with TPM enhanced security protects your data on your hard drive from unauthorized access.

Features

Authentication is required before Windows will even start.

Or you can even permanently destroy data on your hard drive in preparation for your system disposal or redeployment with Secure Erase.

This hardware-based solution encrypts and decrypts data as it is written or read from the hard drive and is supported by HP Drive Encryption+. You get faster encryption performance than that of software- based encryption solutions.

+ Requires Windows. Data is protected prior to Drive Encryption login. Turning the PC off or into hibernate logs out of Drive Encryption and prevents data access.

HP provides a separate management solution, targeted at the enterprise and the SMB:

Digital Persona Pro Workgroup: Designed for the small business customer. Provides features similar to the Active Directory version, but for workgroups. Workgroup activation is built into HP ProtectTools, and activation of up to 5 seats is completely free.

For more information on Central Management for HP ProtectTools, refer to: http://www.hp.com/products/security

POWER

Power Supply

External HP 150W Slim Smart AC adapter
(167.0 x 82.0 x 25.4mm)
External HP 200W Slim Smart AC adapter
(172 x 96 x 25.4mm)

Power cord included is 6-foot (1.8 meter).
Total length including external AC adapter is 12 feet (3.66 meter).
HP Fast Charge*

Primary Battery
HP 8-cell Lithium-Ion Battery (83 WHr)
HP Long Life 8-cell Lithium-Ion Battery (75 WHr) **

Secondary Battery
HP BB09 Ultra Extended Life Notebook Battery (9-cell/100 WHr)
HP ST09 Extended Life Notebook Battery (9-cell/73 WHr)

Battery Life
Battery life up to 14 hours and 15 minutes***

System Standby Time
In sleep mode 1 week

* HP Fast Charge recharges your battery up to 90% within 90 minutes when the system is off. HP Fast Charge does not apply to the HP ST09 Extended Life Notebook Battery or HP BB09 Ultra Extended Life Notebook Battery.
** Available with 3-year warranty only
***Battery life will vary depending on the product model, configuration, loaded applications, features, use, wireless functionality and power management settings. The maximum capacity of the battery will naturally decrease with time and usage. See MobileMark07 battery benchmark http://www.bapco.com/products/mobilemark2007 for additional details.

Power Conservation
NVIDIA Optimus technology

Features

Hibernation
Standby
ACPI compliance

ENVIRONMENTAL

US Energy Star ®
IT ECO declaration
EPEAT Gold where HP registers commercial desktop products. See http://www.epeat.net for registration status in your country US Federal Energy Management Program (FEMP)

NOTE: This product has received or is in the process of being certified to the following approvals and may be labeled with one or more of these marks.

WEIGHTS & DIMENSIONS

Weight
Starting at 6.20 lb (2.82 kg) with mini-card SSD and weight saver (no optical drive)
Starting at 6.45 lb (2.93 kg) with hard drive and DVD-R/W drive

Dimensions (h x w x d)
1.2 in (at front)/1.4 in (at rear) x 15.0 in x 10.1 in
30.5 mm (at front)/35.5 mm (at rear) x 381.5 mm x 257.0 mm
Height with DreamColor display: 1.34 in/ 34.0 mm at front; 1.54 in / 39 mm at rear

NOTE: Height varies depending upon where on the notebook the measurement is made. Weight varies by configuration and components. Weight includes 8-cell battery, hard drive, 1 GB memory, and no optical drive. Weight varies by configuration and components.

PORTS/SLOTS

Ports

VGA – One
DisplayPort v1.2– One
Thunderbolt* – One
Stereo microphone in / headphone-out combo jack – One
Power Connector – One
Secondary Battery Connector – One
Docking Connector – One
RJ-45 (Ethernet) – One
USB 3.0 – Two
USB 3.0 Charging Port – One
USB 2.0 – One
Security lock slot – One

Digital Media Slots
ExpressCard/54 slot – One (Supports ExpressCard/54)
SD UHS-II Flash Media slot – One (Supports next generation SD (Secure Digital), backward compatible to SDHC, SDXC, Integrated Smart Card Reader (Compatible with ISO 7816 compliant Smart Cards PC/SC interface support; FIPS 201 compliant)

Features

SERVICE AND SUPPORT

HP Services offers limited 3-year, 1-year and 90-day warranty options depending on country.
On-site service and warranty upgrades are also available. HP Care Pack Services extend service contracts beyond the standard warranties. To choose the right level of service for your HP product, use the HP Care Pack Services Lookup Tool at: http://www.hp.com/go/lookuptool. Additional HP Care Pack Services information by product is available at: http://www.hp.com/hps/carepack.

NOTE: Certain restrictions and exclusions apply. Consult the HP Customer Support Center for details.
http://h20000.www2.hp.com/bizsupport/TechSupport/ProductRoot.jsp

SYSTEM UNIT

Stand-Alone Power Requirements (AC Power)	**Nominal Operating Voltage**	19.5 V		
	Average Operating Power		**Windows 7 (32-bit)**	**Windows 7 (64-bit)**
		NVIDIA Graphics	16.28 W	16.8 W
	Max Operating Power	< 150 W or < 200 W		
Temperature	**Operating**	32° to 95° F (0° to 35° C) (not writing optical) 41° to 95° F (5° to 35° C) (writing optical)		
	Non-operating	-4° to 140° F (-20° to 60° C)		
Relative Humidity	**Operating**	10% to 90%, non-condensing		
	Non-operating	5% to 95%, 101.6° F (38.7° C) maximum wet bulb temperature		
Shock	**Operating**	40 G, 2 ms, half-sine		
	Non-operating	200 G, 2 ms, half-sine		
Random Vibration	**Operating**	0.75 grms		
	Non-operating	1.50 grms		
Altitude (unpressurized)	**Operating**	-50 to 10,000 ft (-15.24 to 3,048 m)		
	Non-operating	-50 to 40,000 ft (-15.24 to 12,192 m)		
Industry Standard Certifications	**UL**	Yes		
	CSA	Yes		
	FCC Compliance	Yes		
	ENERGY STAR®	Select models*		
	EPEAT	< 150 W or < 200 W		
	ICES	Yes		
	Australia / NZ A-Tick Compliance	Yes		
	CCC	Yes		
	Japan VCCI Compliance	Yes		
	KC	Yes		
	BSMI	Yes		
	CE Marking Compliance	Yes		
	MIL-STD-810G* **	Planned		

* Configurations of the HP ZBook 15 that are ENERGY STAR qualified are identified as HP ZBook 15 ENERGY STAR on HP websites and on http://www.energystar.gov.
** EPEAT registration varies by country. See http://www.epeat.net for registration status by country.
EPEAT status listed above applies to U.S.
*** MIL-STD-810G testing was not intended to demonstrate fitness for U.S. Department of Defense contracts or for military use. Test results are not a guarantee of future performance under these test conditions.

For accessibility information on HP products, please visit: http://www.hp.com/accessibility.

Technical Specifications

DISPLAY

15.6" diagonal LED-backlit FHD UWVA eDP anti-glare + Panel Self Refresh (PSR) (1920 x 1080)	**Active Area** (W x H)	13.54 x 7.59 in (34.4 x 19.4 cm)	
	Dimensions (W x H)	15.6 in (39.6 cm)	
	Weight	420 g (max)	
	Surface Treatment	Anti-glare	
	Contrast Ratio	600:1 (typical)	
	Refresh Rate	60 Hz	
	Brightness	300 nit typical	
	Pixel Resolution	**Format**	1920 x 1080 (FHD)
		Configuration	RGB Stripe
	Backlight	LED	
	PPI	142	
	Viewing Angle	UWVA 85/85/85/85	

15.6-inch LED FHD UWVA (1920 x 1080) anti-glare DreamColor	**Active Area** (W x H)	13.54 x 7.59 in (34.4 x 19.4 cm)		
	Diagonal Size	15.6 in (39.6 cm)		
	Surface Treatment	Anti-glare		
	Contrast Ratio	800:1 (min)		
	Refresh Rate	48 Hz, 50 Hz and 60 Hz		
	Brightness	210 nits (Typ		
	Pixel Resolution	**Pitch**	0.179 mm x 0.179 mm	
		Format	1920 x 1080 (FHD)	
		Configuration	RGB Stripe	
	Backlight	RGB LED		
	PPI	142		
	Viewing Angle	±89° Horizontal, ±89° Vertical (typical)		
	Technology Type	30-bit In-Plane Switching (IPS)		
	Color Depth	10-bits/color		
	Display Colors	Over 1 billion colors (native mode)		
	Color Gamut Coverage		**CIE1931 (x,y)**	**CIE 1976 (u',v')**
		NTSC	109%	129%
		AdobeRGB	114%	127%
		sRGB	154%	148%

15.6" diagonal LED-backlit FHD SVA eDP anti-glare (1920 x 1080)	**Active Area** (W x H)	13.54 x 7.59 in (34.4 x 19.4 cm)	
	Dimensions (W x H)	15.6 in (39.6 cm)	
	Weight	380 g (max)	
	Surface Treatment	Anti-glare	
	Contrast Ratio	400:1 (typical)	
	Refresh Rate	60 Hz	
	Brightness	300 nit typical	
	Pixel Resolution	**Format**	1920 x 1080 (FHD)
		Configuration	RGB Stripe

Backlight	LED	
PPI	142	
Viewing Angle	SVA 45/45/25/35	

STORAGE AND DRIVES

Internal Storage

1 TB 5400 rpm SATA Hard Drive	**Drive Weight**	0.25 lbs (115g)	
	Capacity	1 TB	
	Height	0.37 in (9.5 mm)	
	Width	2.75 in (70 mm)	
	Interface	ATAATA-8, SATA 2.6, 3.0 Gb/s, NCQ	
	Transfer Rate	**Synchronous** (maximum)	300 MB/s (Drive Capability)
	Seek Time (typical reads, including settling)	**Single Track**	4 ms
		Average	14 ms
		Maximum	24 ms
	Cache	16 MB	
	Rotational Speed	5400 rpm	
	Logical Blocks	1,953,525,168	
	Operating Temperature	32° to 140° F (0° to 60° C) [case temp]	
	Features	ATA Security	
750 GB 7200 rpm SATA Hard Drive	**Drive Weight**	0.25 lbs (115g)	
	Capacity	750 GB	
	Height	0.37 in (9.5 mm)	
	Width	2.75 in (70 mm)	
	Interface	ATA-8, SATA 2.6, 3.0 Gb/s, NCQ	
	Transfer Rate	**Synchronous** (maximum)	300 MB/s (Drive Capability)
	Seek Time (typical reads, including settling)	**Single Track**	1.5 ms
		Average	11 ms
		Maximum	22 ms
	Cache	16 MB	
	Rotational Speed	7200 rpm	
	Logical Blocks	1,465,149,168	
	Operating Temperature	32° to 140° F (0° to 60° C) [case temp]	
	Features	ATA Security	
500 GB 7200 rpm SATA Hard Drive	**Drive Weight**	0.25 lbs (115g)	
	Capacity	500 GB	
	Height	0.37 in (9.5 mm)	
	Width	2.75 in (70 mm)	
	Interface	ATA-8, SATA 2.6, 3.0 Gb/s, NCQ	
	Transfer Rate	**Synchronous** (maximum)	300 MB/s (Drive Capability)
	Seek Time (typical reads, including	**Single Track**	1.5 ms
		Average	11 ms

Technical Specifications

	settling)	**Maximum**	22 ms
	Cache	16 GB	
	Rotational Speed	7200 rpm	
	Logical Blocks	976,773,168	
	Operating Temperature	32° to 140° F (0° to 60° C) [case temp]	
	Features	ATA Security	
500 GB 5400 rpm SATA FIPS* Hard Drive	**Drive Weight**	0.25 lbs (115g)	
	Capacity	500 GB	
	Height	0.28 in (7 mm)	
	Width	2.75 in (70 mm)	
	Interface	ATA-8, SATA 2.6, 3.0 Gb/s, NCQ	
	Transfer Rate	**Synchronous** (maximum)	300 MB/s (Drive Capability)
	Seek Time (typical reads, including settling)	**Single Track**	1.5 ms
		Average	11 ms
		Maximum	22 ms
	Cache	16 MB	
	Rotational Speed	5400 rpm	
	Logical Blocks	976,773,168	
	Operating Temperature	32° to 140° F (0° to 60° C) [case temp]	
	Features	ATA Security, TCG Opal SSC 2.0 and FIPS 140-2-level2	
	* FIPS-certified, hardware-based AES-256 encryption image.		
500 GB 7200 rpm SMART SATA II Self Encrypting Drive	**Drive Weight**	0.25 lbs (115g)	
	Capacity	500 GB	
	Height	0.37 in (9.5 mm)	
	Width	2.50 in (63.5 mm)	
	Interface	ATA-8, SATA 2.6, 3.0 Gb/s	
	Transfer Rate	**Synchronous** (maximum)	300 MB/s (Drive Capability)
	Seek Time (typical reads, including settling)	**Single Track**	1 ms
		Average	12 ms
		Maximum	20 ms
	Cache	16 MB	
	Rotational Speed	7200 rpm	
	Logical Blocks	976,773,168	
	Operating Temperature	32° to 140° F (0° to 60° C) [case temp]	
	Features	ATA Security	
320 GB 7200 rpm SATA Hard Drive	**Drive Weight**	0.25 lbs (115 g)	
	Capacity	320 GB	
	Height	0.37 in (9.5 mm)	
	Width	2.75 in (70 mm)	
	Interface	ATA-8, SATA 2.6, 3.0 Gb/s, NCQ	
	Transfer Rate	**Synchronous** (maximum)	300 MB/s (Drive Capability)
	Seek Time	**Single Track**	1.5 ms

Technical Specifications

	(typical reads, including settling)	**Average**	11 ms
		Maximum	22 ms
	Cache	16 MB	
	Rotational Speed	7200 rpm	
	Logical Blocks	625,142,448	
	Operating Temperature	32° to 140° F (0° to 60° C) [case temp]	
	Features	ATA Security	
SATA 6 Gb/s 512 GB, 2.5-inch Solid State Drive	**Drive Weight**	73 Grams	
	Capacity	512 GB	
	Height	0.276 in (7 mm)	
	Width	2.76 in (70 mm)	
	Interface	SATA Gen 3 (6 Gb/s)	
	Performance	**Maximum Sequential Read**	**Maximum Sequential Write**
		460 MB/s	260 MB/s
	Logical Blocks	1,000,215,216	
	Operating Temperature	32° to 158°F (0° to 70°C) [case temp]	
	Features	ATA Security; ATA-8; SATA 3.0 DIPM; TRIM	
SATA 6 Gb/s 256 GB, 2.5-inch SATA SED Solid State Drive	**Drive Weight**	73 Grams	
	Capacity	256 GB	
	Height	0.276 in (7 mm)	
	Width	2.76 in (70 mm)	
	Interface	SATA 3 (6 Gb/s)	
	Performance	**Maximum Sequential Read**	**Maximum Sequential Write**
		Up to 460 MB/s	Up to 260 MB/s
	Logical Blocks	500,118,192	
	Operating Temperature	32° to 158°F (0° to 70°C) [case temp]	
	Features	ATA Security; ATA-8 compliant; SATA 3.0; DIPM; TRIM	
SATA 6 Gb/s 256 GB, 2.5-inch Solid State Drive	**Capacity**	256GB	
	Height	0.28 in; 0.7 cm	
	Interface	SATA 6Gb/s	
	Synchronous Transfer Rate (Maximum)	Up to 500MB/s (Sequential Read)	
	Operating Temperature	32° to 158° F (0° to 70° C)	
SATA 6 Gb/s 240 GB, 2.5-inch Solid State Drive	**Capacity**	240GB	
	Width	**Physical Size**	2.5 in; 6.36 cm
	Interface	6Gb/s SATA	
	Synchronous Transfer	600 Mb/s	

Technical Specifications

	Rate (Maximum)		
	Operating Temperature	32° to 158° F (0° to 70° C)	
SATA 6 Gb/s 180 GB, 2.5-inch Solid State Drive	**Drive Weight**	78 Grams	
	Capacity	180 GB	
	Height	0.276 in (7 mm)	
	Width	2.76 in (70 mm)	
	Interface	SATA Gen 3 (6 Gb/s)	
	Performance	**Maximum Sequential Read**	**Maximum Sequential Write**
		550 MB/s	520 MB/s
	Logical Blocks	351,651,888	
	Operating Temperature	32° to 158°F (0° to 70°C) [case temp]	
	Features	ATA Security; ATA-8, SATA 3.0; DIPM; TRIM	
SATA 6 Gb/s 128 GB, 2.5-inch Solid State Drive	**Drive Weight**	73 Grams	
	Capacity	128 GB	
	Height	0.276 in (7 mm)	
	Width	2.76 in (70 mm)	
	Interface	SATA 3 (6 Gb/s)	
	Performance	**Maximum Sequential Read**	**Maximum Sequential Write**
		415 MB/s	175 MB/s
	Logical Blocks	250,069,680	
	Operating Temperature	32° to 158°F (0° to 70°C) [case temp]	
	Features	ATA Security; ATA-8; SATA 3.0 DIPM; TRIM	

Optical Drives

DVD-ROM Drive	**Access Times**	Random	< 140 ms CD (typical)
			< 160 ms DVD (typical)
	Max Data Transfer Rate	24X CD-ROM	
		8X-DVD	

Technical Specifications

	Transfer Mode	UDMA Mode 5	
	Interface	Gen 1 SATA	
	Supported Media (read)	CD-DA, CD-TEXT, CD-ROM, CD-ROM XA, MIXED MODE CD, CD-I, CD-I Bridge (Photo-CD, Video CD), Multisession CD (Photo-CD, CD-EXTRA, Portfolio, CD-R, CD-RW), CD-R, CD-RW, DVD-ROM (DVD-5, DVD-9, DVD-10, DVD-18), DVD-R, DVD-RW, DVD+R, DVD+RW, DVD-RAM	
	Supported Media (write)	None	
	Max Media Capacity (read)	8.5GB	
	Transport	Tray Loading	
DVD+/-RW SuperMulti DL Drive	**Access Times**	Random	<140ms CD (typical) < 160 ms DVD (typical)
	Max Data Transfer Rate	24X CD-ROM 8X DVD 24X CD-R 24X CD-RW 8X DVD+R 8X DVD+RW 8X DVD-R 6X DVD-RW 6X - DVD+R Dual Layer 6X - DVD-R Dual Layer 5X DVD-RAM	
	Transfer Mode	UDMA Mode 5	
	Interface	Gen 1 SATA	
	Supported Media (read)	CD-DA, CD-TEXT, CD-ROM, CD-ROM XA, MIXED MODE CD, CD-I, CD-I Bridge (Photo-CD, Video CD), Multisession CD (Photo-CD, CD-EXTRA, Portfolio, CD-R, CD-RW), CD-R, CD-RW, DVD-ROM (DVD-5, DVD-9, DVD-10, DVD-18), DVD-R, DVD-RW, DVD+R, DVD+RW, DVD-RAM	
	Supported Media (write)	CD-R, CD-RW, DVD+R, DVD+RW, DVD-R, DVD-RW, DVD-RAM, DVD+R DL, DVD-R DL	
	Max Media Capacity (read)	8.5 GB	
	Max Media Capacity (write)	8.5 GB	
	Transport	Tray Loading	
Blu-ray ROM DVD+/-RW SuperMulti DL Drive	**Access Times**	Random	<190 ms CD-ROM (typical) < 180ms DVD-ROM (typical) <230 ms BD-ROM (typical)
	Max Data Transfer Rate	24X CD-ROM 8X DVD-ROM 24X CD-R 16X CD-RW 8X DVD+R	

		8X DVD+RW	
		8X DVD-R	
		6X DVD-RW	
		4X - DVD+R Dual Layer	
		4X - DVD-R Dual Layer	
		5X DVD-RAM	
		6X BD-ROM	
	Transfer Mode	UDMA Mode 5	
	Interface	Gen 1 SATA	
	Supported Media (read)	CD-DA, , CD-TEXT, CD-ROM, CD-ROM XA, MIXED MODE CD, CD-I, CD-I Bridge (Photo-CD, Video CD), Multisession CD (Photo-CD, CD-EXTRA, Portfolio, CD-R, CD-RW), CD-R, CD-RW, DVD-ROM (DVD-5, DVD-9, DVD-10, DVD-18), DVD-R, DVD-RW, DVD+R, DVD+RW. DVD-RAM, BD-ROM, BD-R, BD-RE	
	Supported Media (write)	CD-R, CD-RW, DVD+R, DVD+R DL, DVD+RW, DVD-R, DVD-R DL, DVD-RW, DVD-RAM	
	Max Media Capacity (read)	50.0 GB	
	Max Media Capacity (write)	8.5GB	
	Transport	Tray Loading	
Blu-ray R/RE DVD+/-RW SuperMulti DL Drive	**Access Times**	Random	<165 ms CD-ROM (typical)
			<185 ms DVD-ROM (typical)
			<205 ms BD-ROM (typical)
	Max Data Transfer Rate	24X CD-ROM	
		8X DVD-ROM	
		24X CD-R	
		16X CD-RW	
		8X DVD+R	
		8X DVD+RW	
		8X DVD-R	
		6X DVD+R Dual Layer	
		6X DVD-R Dual Layer	
		5X DVD-RAM	
		6X BD-ROM	
		6X BD-R	
		2X BD-RE	
	Transfer Mode	UDMA Mode 5	
	Interface	Gen 1 SATA	
	Supported Media (read)	CD-DA, , CD-TEXT, CD-ROM, CD-ROM XA, MIXED MODE CD, CD-I, CD-I Bridge (Photo-CD, Video CD), Multisession CD (Photo-CD, CD-EXTRA, Portfolio, CD-R, CD-RW), CD-R, CD-RW, DVD-ROM (DVD-5, DVD-9, DVD-10, DVD-18), DVD-R, DVD-RW, DVD+R, DVD+RW. DVD-RAM, BD-ROM, BD-R, BD-RE	
	Supported Media (write)	CD-R, CD-RW, DVD+R, DVD+R DL, DVD+RW, DVD-R, DVD-R DL, DVD-RW, DVD-RAM, BD-R, BD-RE	
	Max Media Capacity (read)	50.0 GB	

	Max Media Capacity (write)	50.0 GB
	Transport	Tray Loading

SECURITY

HP Fingerprint Sensor	**Mobile Voltage Operation**	3.0V-3.6V Single Supply
	Operating Temperature	14° - 167°F (-10° - 75°C)
	Current consumption image	36mA
	Low latency wait for finger	950 uA
	Capture rate	3000 lines/sec
	ESD Resistance	IEC 6100-4-2 4B (+/-15KV)
	Detection Matrix	200*1 (plus another secondary line); 508 dpi, sensor area 12*3 mm

NETWORKING/COMMUNICATIONS

Intel® I217-LM Gigabit Network Connection	**Ethernet Features**	10 Mbit/s operation (10BASE-T; IEEE 802.3; IEEE 802.3 clauses 13-14) 100 Mbit/s operation (100BASE-TX; IEEE 802.3u; IEEE 802.3 clauses 21-30) 1000 Mbit/s operation (1000BASE-T; IEEE 802.3ab; IEEE 8023. Clauses 40) IEEE 802.3u Auto-Negotiation (Automatic Speed Selection) Full Duplex Operation at all Speeds, Half Duplex operation at 10 and 100 Mbit/s IEEE 802.1p QoS (Quality of Service) Support IEEE 802.1q VLAN support IEEE 802.3x Flow Control (IEEE 802.3 clauses 31-32; configurable) IEEE 802.3az EEE(Energy Efficient Ethernet) IEEE 802.1as/1588 conformance Jumbo Frame 9K Auto MDI/MDIX Crossover cable detection
	Power Management	ACPI compliant - multiple power modes Energy Detect Low Power Mode(Green Ethernet)
	Performance Features	TCP/IP/UDP Checksum Offload (configurable) Protocol Offload(ARP & NS) Large send offload and Giant send offload Receiving Side Scaling MACSec Offload (802.3ae) Intel vPro iSCSI Boot
	Manageability	Wake-on-LAN from standby and hibernation (Magic Packet and Microsoft Wake-Up Frame); Wake-on-LAN from off (Magic Packet only) PXE 2.1 Remote Boot Statistics Gathering (SNMP MIB II, Ethernet-like MIB, Ethernet MIB (802.3x, clause 30)) Comprehensive diagnostic and configuration software suite Virtual Cable Doctor for Ethernet cable status
	Interface	PCI Express 1.1 x1 to fully support ASPM L0s/L1 and CLKREQ. NOTE: Intel® I217-LM Gigabit interface is not PCIe compliant. It operates at half of PCIe specification V1.1 (2.5GT/S) speed.
	NIC Device Driver Name	Intel Ethernet Network Connection I217-LM

Technical Specifications

HP hs3110 HSPA+ Mobile Broadband Module	**Technology/Operating Bands**	Modes: WCDMA/HSDPA/HSUPA/HSPA+/AWS/GSM/EDGE/GPRS Penta-band WCDMA/HSDPA/HSUPA/HSPA+/AWS: 850/900/1900/2100/AWS MHz GSM/GPRS/EDGE: 850/900/1800/1900 MHz
	Wireless Protocol Standards	GSM/GPRS/EDGE: Class B, Multi-slot class 33, coding schemes CS1 - CS4 and MSC1 - MSC9. UMTS/WCDMA: Release 99 and Release 7 Advanced Receiver Type 3i
	Wireless Parametric Standards	Complies with 3GPP specifications
	Maximum Data Rates	GPRS/EDGE: Multi-slot Class 33, Class B WCDMA PS: UL (384 kbps) / DL (384 kbps) UL/DL HSPA: UL (5.76 Mbps)/ DL (7.2 Mbps) UL/DL HSPA+: UL (5.76 Mbps)/ DL (21Mbps)
	GPS	GPS Standalone, A-GPS: L1 (Internet- and Network assisted
	GPS Bands	1575.42 MHz (± 1.023 MHz)
	Maximum Output Power	WCDMA/HSPA/HSPA+ 2100/1900/900/850/AWS MHz: +24dBm (Power Class 3) GPRS 1900/1800 MHz: +30dBm (Power Class 1) GPRS 900/850 MHz: +33dBm (Power Class 4) EDGE 1900/1800 MHz: +26dBm (Power Class E2) EDGE 900/850 MHz: +27dBm (Power Class E2)
	Maximum Power Consumption	2500mA (peak); 600mA (average)2700mA (peak)
	Power Consumption, Sleep Mode	3.6 mA
	Power Management	USB selective suspend, Connected Standby Integrated notebook wireless button
	Antenna Type	Dual high efficiency 5 band antennae with spatial diversity, mounted in the display enclosure
	Form Factor	M.2 Socket 2, USB 2.0 interface high speed
	Weight	< 6g
HP lt4111 LTE/EV-DO/HSPA+ Mobile Broadband Module*	**Technology/Operating Bands**	LTE FDD all bands with diversity: 1900 MHz (Band II) , 1700/2100MHz (Band IV (AWS), 850 MHz (Band V), 700MHz (Band XIII), 700MHZ (Band XVII), 1900MHz G Block (Band XXV) WCDMA/HSDPA/HSUPA/HSPA+: all bands with diversity: 2100 MHz (Band I), 1900 MHz (Band II) , AWS 1700/2100MHz (Band IV), 850 MHz (Band V), 800 MHz (Band VIII) GSM/GPRS/EDGE: 1900 MHz, 1800 MHz , 850 MHz , 900 MHz CDMA: Cellular 800MHz (BC0), PCS 1900MHz (BC1)
	Wireless Protocol Standards	3GPP Release 8 LTE Specification WCDMA R99, 3GPP Release 5, 6 and 7 UMTS Specification EVDO Release 0 and Release A
	Wireless Parametric Standards	Complies with 3GPP specifications Release 8 for LTE
	Maximum Data Rates	LTE (Category 3): 100 Mbps (Download), 50Mbps (Upload) DC-HSPA+: 42 Mbps (Download), 5.76 Mbps (Upload) HSPA+: 21.6 Mbps (Download), 5.76 Mbps (Upload) EDGE: 236.8 kbps (Download), 236.8 kbps (Upload)

Technical Specifications

		GPRS: 85.6 kbps(Download), 85.6 kbps (Upload)
	GPS	Standalone GPS, A-GPS, GPS XTRA
	GPS Bands	1575.42 MHz (± 1.023 MHz), GLONASS 1596-1607MHz
	Maximum Output Power	LTE: +23 dBm (+/- 1 dBm) WCDMA: +23 dBm (+/- 1 dBm) GSM850/900, GMSK: +32dBm (+/- 1dBm) GSM850/900, 8PSK: +27dBm (+/- 1dBm) DCS1800 / PCS 1900, GMSK: +29dBm (+/- 1dBm) DCS1800 / PCS 1900, 8PSK: +26dBm (+/- 1dBm) CDMA: +24dBm (+/- 1dBm)
	Maximum Power Consumption	LTE: 1,200 mA (peak); <900 mA (average) WCDMA: 1,100 mA (peak); <800 mA (average) EGPRS: 2,500 mA (peak); <700 mA (average)
	Power Consumption, Sleep Mode	2 mA
	Power Management	USB selective suspend, Integrated notebook wireless button
	Antenna Type	Dual high efficiency multi-band antennae with spatial diversity
	Form Factor	M.2, 3042-S3 Key B
	Weight	6 g
	Dimensions (Length x Width x Thickness)	42 mm × 30 mm × 2.3 mm
	Voltage, Operating	3.135 V to 4.4 V (3.3 V +1.1V/-0.165V)
	Temperature, operating (from TIA/EIA/IS-98-D)	-13° to 140° F (-25° to 60° C)
	Temperature, non-operating, 96 hours (from MIL-STD 202 Method 108)	-40° to 185° F (-40° to 85° C)
	Humidity, non-operating	95% relative humidity for 48 hours @ 185° F (85° C) (non-condensing)
	LED activity	LED Off - Radio Off; Solid LED On - Radio On
	* Not available with Dreamcolor	
HP lt4112 LTE/HSPA+ Gobi 4G Module	**Technology/Operating bands**	LTE FDD all bands with diversity: 2100 MHz (Band I), 1900 MHz (Band II), 1800 MHz (Band III), 850 MHz (Band V), 2600 MHz (Band VII), 900 MHz (Band VIII), 700 MHz (Band XX, DD800) WCDMA/HSDPA/HSUPA/HSPA+ all bands with diversity: 2100 MHz (Band I), 1900 MHz (Band II), 800 MHz (Band V), 900 MHz (Band VIII) GSM/GPRS/EDGE: 1900 MHz (Band II), 1800 MHz (Band III), 850 MHz (Band V), 900 MHz (Band VIII)
	Wireless protocol standards	3GPP Release 8 LTE Specification WCDMA R99, 3GPP Release 5, 6 and 7 UMTS Specification
	Wireless parametric standards	Complies with 3GPP specifications Release 8 for LTE
	Maximum data rates	LTE (Category 3): 100 Mbps (Download), 50Mbps (Upload) DC-HSPA+: 42 Mbps (Download), 5.76 Mbps (Upload) HSPA+: 21.6 Mbps (Download), 5.76 Mbps (Upload) EDGE: 236.8 kbps (Download), 236.8 kbps (Upload) GPRS: 85.6 kbps(Download), 85.6 kbps (Upload)
	GPS	Standalone
	GPS bands	1575.42 MHz (± 1.023 MHz), GLONASS 1596-1607MHz

Technical Specifications

	Maximum output power	LTE: +23 dBm (+/- 2 dBm) WCDMA: +23.5 dBm (+/- 1 dBm) GPRS Band II, III: +29.5 dBm (+/- 1 dBm) GPRS Band V, VIII: +32.5 dBm (+/- 1 dBm) EGPRS Band II, III: +26.5 dBM (+/-1.5 dBm) EGPRS Band V, VIII: +27.5 dBM (+/-1.5 dBm)
	Maximum power consumption	LTE: 1,200 mA (peak); <900 mA (average) WCDMA: 1,100 mA (peak); <800 mA (average) EGPRS: 2,800 mA (peak); <700 mA (average)
	Power consumption, sleep mode	3 mA
	Power management	USB selective suspend, Integrated notebook wireless button
	Antenna type	Dual high efficiency multi-band antennae with spatial diversity
	Form Factor	M.2, USB 2.0 interface
	Weight	6 g
	Dimensions (Length x Width x Thickness)	42 mm × 30 mm × 2.3 mm
	Voltage, Operating	3.135 V to 4.4 V (3.3 V +1.1V/-0.165V)
	Temperature, operating (from TIA/EIA/IS-98-D)	14° to 131° F (–10° to 55° C)
	Temperature, non-operating, 96 hours (from MIL-STD 202 Method 108)	–40° to 185° F (–40° to 85° C)
	Humidity, non-operating	95% relative humidity for 48 hours @ 185° F (85° C) (non-condensing)
	LED activity	LED Off - Radio Off; Solid LED On - Radio On
Intel Dual Band Wireless-AC 7260 802.11 ac (2x2) WiFi + BT 4.0 combo Adapter*	**Wireless LAN Standards**	IEEE 802.11a IEEE 802.11b IEEE 802.11g IEEE 802.11n IEEE 802.11ac
	Interoperability	Wi-Fi certified
	Frequency Band	802.11b/g/n • 2.402 - 2.482 GHz 802.11a/n • 4.9 - 4.95 GHz (Japan) • 5.15 - 5.25 GHz • 5.25 - 5.35 GHz • 5.47 - 5.725 GHz • 5.825 - 5.850 GHz • 2.402 - 2.482 GHz
	Data Rates	802.11b: 1, 2, 5.5, 11 Mbps 802.11g: 6, 9, 12, 18, 24, 36, 48, 54 Mbps 802.11a: 6, 9, 12, 18, 24, 36, 48, 54 Mbps 802.11n: MCS 0 ~ MCS 15, (20MHz, and 40MHz)

Technical Specifications

	802.11ac : MCS0 ~ MCS9, (1SS, and 2SS) (20MHz, 40MHz, and 80MHz)
Modulation	Direct Sequence Spread Spectrum BPSK, QPSK, CCK, 16-QAM, 64-QAM, 256-QAM
Security[1]	• IEEE and WiFi compliant 64 / 128 bit WEP encryption for a/b/g mode only • AES-CCMP: 128 bit in hardware • 802.1x authentication • WPA, WPA2: 802.1x. WPA-PSK, WPA2-PSK, TKIP, and AES. • WPA2 certification • IEEE 802.11i • Cisco Certified Extensions, all versions through CCX4 and CCX Lite • WAPI
Network Architecture Models	Ad-hoc (Peer to Peer) Infrastructure (Access Point Required)
Roaming	IEEE 802.11 compliant roaming between access points
Output Power[2]	• 2.4G: +13.5dBm minimum • 5G: +12dBm minimum • Maximum output power must be able to achieve modular regulatory certification with notebooks that have antennas >20cm from the user and peak gain of +3dBi at 2.4GHz and +4dBi at 5GHz
Power Consumption	Transmit: 2.0 W (max) Receive: 1.6 W (max) Idle mode (PSP): 250 mW (WLAN Associated) Idle mode: 100 mW (WLAN unassociated) Radio disabled: 75 mW
Power Management	ACPI and PCI Express compliant power management 802.11 compliant power saving mode
Receiver Sensitivity[3]	802.11b:-95 dBm (1 Mbps), -93 dBm (2 Mbps), -91 dBm (5.5 Mbps), -88 dBm (11 Mbps) 802.11a/g:-90 dBm (6 Mbps), -89 dBm (9 Mbps), -87 dBm (12 Mbps), -85 dBm (18 Mbps), -82 dBm (24 Mbps), -79 dBm (36 Mbps), -76 dBm (48 Mbps), -74 dBm (54 Mbps) 802.11n:-69 dBm (72.2 Mbps), -66 dBm (300 Mbps)
Antenna type	High efficiency antenna with spatial diversity, mounted in the display enclosure Two embedded dual band 2.4/5 GHz antennas are provided to the card to support WLAN MIMO communications and Bluetooth communications
Form Factor	PCI-Express Half-MiniCard
Dimensions	0.19 x 1.06 x 1.18 in (4.75 x 26.8 x 30 mm)
Weight	3.1g
Operating Voltage	3.3v +/- 9%
Temperature	Operating 14° to 158° F (-10° to 70° C) Non-operating -40° to 176° F (-40° to 80° C)
Humidity	Operating 10% to 90% (non-condensing) Non-operating 5% to 95% (non-condensing)

Technical Specifications

Altitude	Operating	0 to 10,000 ft (3,048 m)
	Non-operating	0 to 50,000 ft (15,240 m)
LED Activity	LED Off - Radio OFF; Solid LED On - Radio ON	

1. Check latest software/driver release for updates on supported security features.
2. Maximum output power may vary by country according to local regulations.
3. Receiver sensitivity is measured at a packet error rate of 8% for 802.11b (CKK modulation) and a packet error rate of 10% for 802.11a/g (OFDM modulation).

Bluetooth Specification	
Bluetooth Specification	V4.0 High Speed, V2.1+EDR, backwards compatible with V1.1, 1.2 and 2.0
Number of Available Channels	79 (1 MHz) available channels
Data Rates and Throughput	3 Mbps data rate; throughput up to 2.17 Mbps Synchronous Connection Oriented links up to 3, 64 kbps, voice channels Asynchronous Connection Less links 2178.1 kbps/177.1 kbps asymmetric or 1306.9 kbps symmetric
Transmit Power	-6 dBm to 4 dBm (Bluetooth Class II)
Receiver Sensitivity	Better than -80 dBM at 0.1 % raw bit error rate
Power Consumption	Peak (Tx) 330 mW Peak (Rx) 230 mW Sleep <17 mW
Antenna	Internally integrated within module
Range	Up to 33 ft (10 m)
Electrical Interface	USB 2.0 compliant Microsoft Windows Plug and Play compliant
Bluetooth Software Supported	Broadcom Bluetooth for Windows Microsoft Windows Bluetooth Software
Link Topology	Point to Point, Multipoint Pico Nets up to 7 slaves
Security	Full support of Bluetooth Security Provisions
Power Management	Microsoft Windows ACPI, and USB Bus Support Self configurable to optimize power conservation in all operating modes, including Standby, Hold, Park, and Sniff
Certifications	All necessary regulatory approvals for supported countries, including: FCC (47 CFR) Part 15C, Section 15.247 & 15.249 ETS 300 328, ETS 300 826 Low Voltage Directive IEC950 UL, CSA, and CE Mark
Bluetooth Profiles Supported	Generic Access Profile (GAP) Service Discovery Application Profile (SDAP) Serial Port Profile (SPP) Dial_Up Networking Profile (DUN) Generic Object Exchange Profile (GOEP) Object Push Profile (OPP) File Transfer Profile (FTP) Synchronization Profile (SYNC) Hard Copy Cable Replacement (HCRP) Personal Area Networking Profile (PAN) Human Interface Device Profile (HID) Generic Audio/Video Distribution Profile (GAVDP) Advanced Audio/Video Distribution Profile (A2DP)

		FAX Profile (FAX) Basic Imaging Profile (BIP) Headset Profile (HSP) Hands Free Profile (HFP) Basic Printing Profile (BPP) VDP (Video Distribution Profile) AVRCP (Audio Video Remote Control Profile)

* Wireless access point and internet service required. Availability of public wireless access points limited. The specifications for the 802.11ac WLAN are draft specifications and are not final. If the final specifications differ from the draft specifications, it may affect the ability of the notebook to communicate with other 802.11ac WLAN devices

Intel Dual Band Wireless-N 7260AN 802.11 a/b/g/n (2x2) WiFi + Bluetooth 4.0 Combo Adaptor*	**Wireless LAN Standards**	IEEE 802.11a IEEE 802.11b IEEE 802.11g IEEE 802.11n	
	Interoperability	Wi-Fi certified Cisco Compatible Extensions Program compliant with Microsoft Windows 7, Windows Vista and XP (details at: http://www.hp.com/go/notebooks/WLAN)	
	Frequency Band	802.11b/g/n	2.402 - 2.482 GHz
		802.11a/n	4.9 - 4.95 GHz (Japan) 5.15 - 5.25 GHz 5.25 - 5.35 GHz 5.47 - 5.725 GHz 5.825 - 5.850 GHz
	Antenna Structure	2 transmit; 2 receive (2x2)	
	Data Rates	802.11a: 6, 9, 12, 18, 24, 36, 48, 54 Mbps 802.11b: 1, 2, 5.5, 11 Mbps 802.11g: 6, 9, 12, 18, 24, 36, 48, 54 Mbps 802.11n: card will support rates for NSS=1 and NSS=2 for RX and TX for 20 and 40 MHz channels. Short and long guard interval shall be supported.	
	Modulation	Direct Sequence Spread Spectrum CCK, BPSK, QPSK, 16-QAM, 64-QAM	
	Security[1]	• IEEE and WiFi compliant 64 / 128 bit WEP encryption for a/b/g mode only • AES-CCMP: 128 bit in hardware • 802.1x authentication • WPA, WPA2: 802.1x. WPA-PSK, WPA2-PSK, TKIP, and AES. • WPA2 certification • IEEE 802.11i • Cisco Certified Extensions, all versions through CCX4 and CCX Lite • WAPI	
	Sub-channels	Multinational support with frequency bands and channels compliant to local regulations.	
	Network Architecture Models	Ad-hoc (Peer to Peer) Infrastructure (Access Point Required)	
	Roaming	IEEE 802.11 compliant roaming between band Access Points	
	Output Power[2]	• 2.4G: +13.5dBm minimum	

- 5G: +12dBm minimum

Power Consumption	Transmit: 2.0 Watts Receive: 1.6 Watts Idle mode[3]: 250 mW (WLAN Associated) Idle mode: 100 mW (WLAN unassociated) Radio off: 75 mW	
Power Management	ACPI and PCI Express compliant power management 802.11 compliant power saving mode	
Receiver Sensitivity[4]	802.11g:-90 dBm (6 Mbps), -89 dBm (9 Mbps), -87 dBm (12 Mbps), -85 dBm (18 Mbps), -82 dBm (24 Mbps), -79 dBm (36 Mbps), -76 dBm (48 Mbps), -74 dBm (54 Mbps) 802.11b:-95 dBm (1 Mbps), -93 dBm (2 Mbps), -91 dBm (5.5 Mbps), -88 dBm (11 Mbps) 802.11g:-90 dBm (6 Mbps), -89 dBm (9 Mbps), -87 dBm (12 Mbps), -85 dBm (18 Mbps), -82 dBm (24 Mbps), -79 dBm (36 Mbps), -76 dBm (48 Mbps), -74 dBm (54 Mbps) 802.11n:-69 dBm (150 Mbps), -66 dBm (300 Mbps)	
Antenna Connections	2 U.FL type connectors (output impedance of 50 ± 2 ohms)	
Form Factor	PCI-Express Half-MiniCard	
Dimensions	0.12 x 1.06 x 1.18 in (3.1 x 26.8 x 30.0 mm)	
Weight	3.1g	
Operating Voltage	3.3v +/- 9%	
Temperature	Operating Non-operating	14° to 158° F (-10° to 70° C) -40° to 176° F (-40° to 80° C)
Humidity	Operating Non-operating	10% to 90% (non-condensing) 5% to 95% (non-condensing)
Altitude	Operating Non-operating	0 to 10,000 ft (3,048 m) 0 to 50,000 ft (15,240 m)
LED Activity	LED Off - Radio OFF; Solid LED On - Radio ON	

1. Check latest software/driver release for updates on supported security features.
2. Maximum output power may vary by country according to local regulations.
3. In Power Save Polling mode and on battery power.
4. Receiver sensitivity is measured at a packet error rate of 8% for 802.11b (CCK modulation) and a packet error rate of 10% for 802.11a/g (OFDM modulation).
5. WLAN supplier's client utility is required for Cisco Compatible Extensions support with Microsoft Windows XP. WLAN may also be compatible with certain third-party software supplicants. WLAN supplier IHV extensions required for Cisco Compatible Extensions support for Microsoft Windows Vista.

HP Integrated Module with Bluetooth 4.0+EDR Wireless Technology

Bluetooth Specification	4.0+EDR Compliant
Dimensions	1.18 x 0.26 x 0.13 in (30 x 6.5 x 3.25 mm)
Frequency Band	2402 to 2480 MHz
Number of Available Channels	79 (1 MHz) available channels
Data Rates and Throughput	3 Mbps data rate; throughput up to 2.17 Mbps Synchronous Connection Oriented links up to 3, 64 kbps, voice channels Asynchronous Connection Less links 2178.1 kbps/177.1 kbps asymmetric

Technical Specifications

		or 1306.9 kbps symmetric
	Transmit Power	-1.5 dBm to 4 dBm (Bluetooth Class II)
	Receiver Sensitivity	Better than -20 dBM at 0.1 % raw bit error rate
	Power Consumption	Peak (Tx) 264 mW Peak (Rx) 231 mW Sleep <1 mW
	Antenna	Internally integrated within module
	Range	Up to 33 ft (10 m)
	Electrical Interface	USB 2.0 compliant Microsoft Windows Plug and Play compliant
	Bluetooth Software Supported	Broadcom Bluetooth for Windows Microsoft Windows Bluetooth Software
	Link Topology	Point to Point, Multipoint Pico Nets up to 7 slaves
	Security	Full support of Bluetooth Security Provisions
	Power Management	Microsoft Windows ACPI, and USB Bus Support Self configurable to optimize power conservation in all operating modes, including Standby, Hold, Park, and Sniff
	Certifications	All necessary regulatory approvals for supported countries, including: FCC (47 CFR) Part 15C, Section 15.247 & 15.249 ETS 300 328, ETS 300 826 Low Voltage Directive IEC950 UL, CSA, and CE Mark
	Bluetooth Profiles Supported	Serial Port Profile (SPP)[1] Service Discovery Application Profile (SDAP) Dial-Up Networking (DUN)[1,2] Generic Object Exchange Profile (GOEP)[1,2] Object Push Profile (OPP)[1,2] File Transfer Profile (FTP) Synchronization Profile (SYNC) Hard Copy Cable Replacement (HCRP)[1,2] Personal Area Networking Profile (PAN)[1,2] Human Interface Device Profile (HID)[1,2] FAX Profile (FAX) Basic Imaging Profile (BIP)[2] Headset Profile (HSP) Hands Free Profile (HFP) Advanced Audio Distribution Profile (A2DP)
	1. indicates the profile is supported by Microsoft Windows XP SP2 2. indicates the profile is part of Windows Vista * Wireless access point and internet service required. Availability of public wireless access points limited.	
Intel Centrino Advanced-N 6205 (2x2)	**Wireless LAN Standards**	IEEE 802.11a IEEE 802.11b IEEE 802.11g IEEE 802.11n* * In countries where 802.11n is not allowed, this capability is not enabled.
	Interoperability	Wi-Fi certified Cisco Compatible Extensions Program compliant with Microsoft Windows 7, Windows Vista and XP (details at:

Technical Specifications

	http://www.hp.com/go/notebooks/WLAN)
Frequency Band	2.4 GHz and 5GHz
Antenna Structure	2 transmit; 2 receive (2x2)
Data Rates	802.11a: 6, 9, 12, 18, 24, 36, 48, 54 Mbps 802.11b: 1, 2, 5.5, 11 Mbps 802.11g: 6, 9, 12, 18, 24, 36, 48, 54 Mbps 802.11n: 66 possible data rates, ranging from 6 Mbps to 300 Mbps, depending on the combination of Bandwidth, Modulation Coding Scheme, and Guard Interval used, as defined in IEEE 802.11n specification
Modulation	Direct Sequence Spread Spectrum DBPSK, DQPSK, CCK, OFDM, BPSK, QPSK, 16-QAM, 64-QAM
Security[1]	Authentication: WPA and WPA2, 802.1x (EAP_TLS, TTLS, PEAP, LEAP, EAP-FAST) Authentication Protocols: PAP, CHAP, TLS, GTC, MS-CHAP, MS-CHAPv2 Encryption: 64 and 128-bit WEP, AES-CCMP, CKIP, TKIP Support for Cisco Security Features (proven compatibility with Cisco Aironet infrastructure products through the Cisco Compatible Extensions Program Version 4) with Microsoft Windows Vista and XP only.
Sub-channels	Multinational support with frequency bands and channels compliant to local regulations.
Media Access Protocol	CSMA/CA (Collision Avoidance) with ACK
Network Architecture Models	Ad-hoc (Peer to Peer) Infrastructure (Access Point Required)
Roaming	IEEE 802.11 compliant roaming between 2.4GHz band Access Points
Output Power (for CCK and OFDM)[2]	17 dBm max
Power Consumption	Transmit: 2.3 Watts (max, with two spatial streams) Receive: 1 Watt (max with two spatial streams) Idle mode[3]: 35 mW (average) Radio off: 20 mW (max)
Power Management	ACPI compliant power management 802.11 compliant power saving mode
Receiver Sensitivity[4]	54 Mbps: -76 dBm, 6 Mbps: -92 dBm
Antenna Connections	2 U.FL type connectors, 50 ohm nominal impedance
Form Factor	PCI-Express Half-MiniCard
Weight	0.0075 lb (3.4 g)
Dimensions	0.12 x 1.06 x 1.18 in (3.1 x 26.8 x 30.0 mm)
Operating Voltage	3.3V +/- 9%
Temperature	Operating 32° to 176° F (0° to 80° C) Non-operating -40° to 176° F (-40° to 80° C)
Humidity	Operating 10% to 90% (non-condensing) Non-operating 5% to 90% (non-condensing)
Altitude	Operating 0 to 10,000 ft (3,048 m) Non-operating 0 to 50,000 ft (15,240 m)
LED Activity	LED Off - Radio OFF; Solid LED On - Radio ON

1. Check latest software/driver release for updates on supported security features.
2. Maximum output power may vary by country according to local regulations.

3. In Power Save Polling mode and on battery power.
4. Receiver sensitivity is measured at a packet error rate of 8% for 802.11b (CCK modulation) and a packet error rate of 10% for 802.11a/g (OFDM modulation).
5. WLAN supplier's client utility is required for Cisco Compatible Extensions support with Microsoft Windows XP. WLAN may also be compatible with certain third-party software supplicants. WLAN supplier IHV extensions required for Cisco Compatible Extensions support for Microsoft Windows Vista.

Intel Centrino® Advanced-N 6235 802.11 a/b/g/n (2x2) + Bluetooth 4.0 LE Combo	**Wireless LAN Standards**	IEEE 802.11a IEEE 802.11b IEEE 802.11g IEEE 802.11n	
	Interoperability	Wi-Fi certified Cisco Compatible Extensions Program compliant with Microsoft Windows 7, Windows Vista and XP (details at: http://www.hp.com/go/notebooks/WLAN)	
	Frequency Band	802.11b/g/n	2.402 - 2.482 GHz
		802.11a/n	4.9 - 4.95 GHz (Japan) 5.15 - 5.25 GHz 5.25 - 5.35 GHz 5.47 - 5.725 GHz 5.825 - 5.850 GHz
	Antenna Structure	2 transmit; 2 receive (2x2)	
	Data Rates	802.11a: 6, 9, 12, 18, 24, 36, 48, 54 Mbps 802.11b: 1, 2, 5.5, 11 Mbps 802.11g: 6, 9, 12, 18, 24, 36, 48, 54 Mbps 802.11n: MCS 0 ~ MCS 15, (20MHz, and 40MHz)	
	Modulation	Direct Sequence Spread Spectrum CCK, BPSK, QPSK, 16-QAM, 64-QAM	
	Security[1]	• IEEE and WiFi compliant 64 / 128 bit WEP encryption for a/b/g mode only • AES-CCMP: 128 bit in hardware • 802.1x authentication • WPA, WPA2: 802.1x. WPA-PSK, WPA2-PSK, TKIP, and AES. • WPA2 certification • IEEE 802.11i • Cisco Certified Extensions, all versions through CCX4 and CCX Lite • WAPI	
	Sub-channels	Multinational support with frequency bands and channels compliant to local regulations.	
	Network Architecture Models	Ad-hoc (Peer to Peer) Infrastructure (Access Point Required)	
	Roaming	IEEE 802.11 compliant roaming between band Access Points	
	Output Power[2]	• 2.4G: +13.5dBm minimum • 5G: +12dBm minimum	
	Power Consumption	Transmit: 2.0 Watts Receive: 1.6 Watts Idle mode[3]: 250 mW (WLAN Associated) Idle mode: 100 mW (WLAN unassociated) Radio off: 75 mW	

Technical Specifications

Power Management	ACPI and PCI Express compliant power management 802.11 compliant power saving mode	
Receiver Sensitivity[4]	802.11g:-90 dBm (6 Mbps), -89 dBm (9 Mbps), -87 dBm (12 Mbps), -85 dBm (18 Mbps), -82 dBm (24 Mbps), -79 dBm (36 Mbps), -76 dBm (48 Mbps), -74 dBm (54 Mbps) 802.11b:-95 dBm (1 Mbps), -93 dBm (2 Mbps), -91 dBm (5.5 Mbps), -88 dBm (11 Mbps) 802.11g:-90 dBm (6 Mbps), -89 dBm (9 Mbps), -87 dBm (12 Mbps), -85 dBm (18 Mbps), -82 dBm (24 Mbps), -79 dBm (36 Mbps), -76 dBm (48 Mbps), -74 dBm (54 Mbps) 802.11n:-69 dBm (150 Mbps), -66 dBm (300 Mbps)	
Antenna Connections	2 U.FL type connectors (output impedance of 50 ± 2 ohms)	
Form Factor	PCI-Express Half-MiniCard	
Weight	3.1g	
Dimensions	0.12 x 1.06 x 1.18 in (3.1 x 26.8 x 30.0 mm)	
Operating Voltage	3.3V +/- 9%	
Temperature	Operating	14° to 158° F (-10° to 70° C)
	Non-operating	-40° to 176° F (-40° to 80° C)
Humidity	Operating	10% to 90% (non-condensing)
	Non-operating	5% to 95% (non-condensing)
Altitude	Operating	0 to 10,000 ft (3,048 m)
	Non-operating	0 to 50,000 ft (15,240 m)
LED Activity	LED Amber - Radio OFF; LED White - Radio ON	

1. Check latest software/driver release for updates on supported security features.
2. Maximum output power may vary by country according to local regulations.
3. In Power Save Polling mode and on battery power.
4. Receiver sensitivity is measured at a packet error rate of 8% for 802.11b (CCK modulation) and a packet error rate of 10% for 802.11a/g (OFDM modulation).
5. WLAN supplier's client utility is required for Cisco Compatible Extensions support with Microsoft Windows XP. WLAN may also be compatible with certain third-party software supplicants. WLAN supplier IHV extensions required for Cisco Compatible Extensions support for Microsoft Windows Vista.

HP Integrated Module with Bluetooth 4.0+EDR Wireless Technology	**Bluetooth Specification**	4.0+EDR Compliant
	Dimensions	1.18 x 0.26 x 0.13 in (30 x 6.5 x 3.25 mm)
	Frequency Band	2402 to 2480 MHz
	Number of Available Channels	79 (1 MHz) available channels
	Data Rates and Throughput	3 Mbps data rate; throughput up to 2.17 Mbps Synchronous Connection Oriented links up to 3, 64 kbps, voice channels Asynchronous Connection Less links 2178.1 kbps/177.1 kbps asymmetric or 1306.9 kbps symmetric
	Transmit Power	-1.5 dBm to 4 dBm (Bluetooth Class II)
	Receiver Sensitivity	Better than -20 dBM at 0.1 % raw bit error rate
	Power Consumption	Peak (Tx) 330 mW Peak (Rx) 230 mW Sleep <17 mW
	Antenna	Internally integrated within module
	Range	Up to 33 ft (10 m)
	Electrical Interface	USB 2.0 compliant

		Microsoft Windows Plug and Play compliant
	Bluetooth Software Supported	Broadcom Bluetooth for Windows Microsoft Windows Bluetooth Software
	Link Topology	Point to Point, Multipoint Pico Nets up to 7 slaves
	Security	Full support of Bluetooth Security Provisions
	Power Management	Microsoft Windows ACPI, and USB Bus Support Self configurable to optimize power conservation in all operating modes, including Standby, Hold, Park, and Sniff
	Certifications	All necessary regulatory approvals for supported countries, including: FCC (47 CFR) Part 15C, Section 15.247 & 15.249 ETS 300 328, ETS 300 826 Low Voltage Directive IEC950 UL, CSA, and CE Mark
	Bluetooth Profiles Supported	Serial Port Profile (SPP) Service Discovery Application Profile (SDAP) Dial-Up Networking (DUN) Generic Object Exchange Profile (GOEP) Object Push Profile (OPP) File Transfer Profile (FTP) Synchronization Profile (SYNC) Hard Copy Cable Replacement (HCRP) Personal Area Networking Profile (PAN) Human Interface Device Profile (HID) FAX Profile (FAX) Basic Imaging Profile (BIP) Headset Profile (HSP) Hands Free Profile (HFP) Advanced Audio Distribution Profile (A2DP)

AUDIO/MULTIMEDIA

AUDIO/MULTIMEDIA - DTS SOUND+

Hardware	**Implementation**	IDT 92HD91
	Function Key Volume Controls	Volume up, volume down, and mute
	Full Duplex	Yes
	Microphone In	Stereo
	Headphone/Line Out	Stereo
	Integrated Microphone	Yes, dual digital microphone array when equipped with optional webcam
Audio Output Quality	**Frequency Response**	20 Hz - 20 kHz
	Signal to Noise Ratio	>85 dB
	Total Harmonic Distortion	0.01%
	Noise Floor	-110 dB
	Play/Record Sampling Rate(s)	8 kHz - 48kHz

Technical Specifications

	DAC	16, 20 or 24-bit	
	ADC	16 or 20-bit	
Internal Stereo Speaker	**Power Rating**	2 Watts	
	Impedance	4 ohms	

POWER

HP 200W Slim Smart AC Adapter	**Dimensions**	6.77 x 3.80 x 1.0 in (172 x 96 x 25.4 mm)	
	Weight	1.65 lb (748 g)	
	Input	100 to 240 VAC	
		Input Efficiency	87% min at 115 VAC
		Input frequency range	47 to 63 Hz
		Input AC current	2.9 A at 90 VAC, 1.45 A at 180 VAC
	Output	Output power	200W
		DC output	19.5V
		Hold-up time	5 msec at 115 VAC input
		Output current limit	<16A, Over voltage protection- 29V max automatic shutdown
	Connector	3 pin/grounded, mates with interchangeable cords	
	Environmental Design	Operating temperature	32° to 104° F (0° to 40° C)
		Non-operating (storage) temperature	-4° to 149° F (-20° to 65° C)
		Altitude	0 to 10,000 ft (0 to 3,048 m)
		Humidity	20% to 80%
		Storage Humidity	10% to 90%
	EMI and Safety Certifications	CE Mark- full compliance with LVD and EMC directives; Worldwide safety standards- IEC950, EN60950, UL1950, Class 1, SELV; Agency approvals- C-UL-US, NORDICS, DENAN, EN55022 Class B, FCC Class B, CISPR22 Class B, CCIB, NOM-1 NYCE; MTBF- over 200,000 hours at 25°C ambient condition.	
HP 150W Slim Smart AC adapter	**Dimensions**	6.59 x 3.23 x 1.0 in (167.5 x 82 x 25.4 mm)	
	Weight	1.25 lb (565 g)	
	Input	100 to 240 VAC	
		Input Efficiency	87% min at 115 VAC
		Input frequency range	47 to 63 Hz
		Input AC current	<2.7 A at 90 VAC
	Output	Output power	150W
		DC output	19.50V +5.0%/-5.0%
		Hold-up time	5 msec at 115 VAC input
		Output current limit	<15A, Over voltage protection- 29V max automatic shutdown
	Connector	3 pin/grounded, mates with interchangeable cords	
	Environmental Design	Operating temperature	41° to 95° F (5° to 35° C)

Technical Specifications

		Non-operating (storage) temperature	-4° to 185° F (-20° to 85° C)
		Altitude	0 to 10,000 ft (0 to 3,048 m)
		Humidity	10% to 95%
		Storage Humidity	10% to 95%
	EMI and Safety Certifications	Worldwide safety and EMC approvals including CE, UL, CSA or cUL, GS, Australian Electric Permit, C-tick, NOM, CCC, KC, GOST, SABS, S mark, BSMI, ISC, PSE, PSB and SII.	
HP 8-cell Lithium-Ion Battery (83 WHr)	**Dimensions** (H x W x L)	0.8 x 2.1 x 10.6 in (2 x 5.3 x 27cm)	
	Weight (max)	0.99lb (0.442 kg)	
	Cells/Type	Lithium-Ion	
	Energy	Voltage	14.8V
		Amp-hour capacity	5.6Ah
		Watt-hour capacity	83Wh
	Temperature	Operating (Charging)	32° to 113° F (0° to 45° C)
		Operating (Discharging)	14° to 122° F(-10° to 50° C)
		Non-operating	-4° to 122° F (-20° to 50° C)
	Battery Re-Charge Time	System in OFF or Standby Mode	2.5 hours
		System ON	3 to 5 hours
	Fuel Gauge LED	No	
	Warranty	1 year	
	Compatible with optional Travel Battery	Yes	
HP Long Life 8-cell Lithium-Ion Battery (75 WHr)	**Dimensions** (H x W x L)	0.8 x 2.1 x 10.6 in (2 x 5.3 x 27cm)	
	Weight (max)	0.99lb (0.442 kg)	
	Cells/Type	8-cell; Lithium-Ion	
	Energy	Voltage	14.4V
		Amp-hour capacity	5.1Ah
		Watt-hour capacity	75Wh
	Temperature	Operating (Charging)	32° to 113° F (0° to 45° C)
		Operating (Discharging)	14° to 140° F (-10° to 60° C)
		Non-operating	-4° to 140° F (-20° to 60° C)
	Battery Re-Charge Time	System in OFF or Standby Mode	2.5 hours
		System ON	3 to 5 hours
	Fuel Gauge LED	No	
	Warranty*	3 year	
	Compatible with optional Travel Battery	Yes	
	* 3-year platform warranty is required for a 3-year Long Life Battery warranty.		
Optional HP BB09 Ultra	**Dimensions** (H x W x L)	1.2 x 5.9 x 11.4 in (3x15x29cm)	

Technical Specifications

Extended Life Notebook Battery (secondary battery)	**Weight** (max)	1.5lb, (.682kg)	
	Cells/Type	Lithium-Ion	
	Energy	**Voltage**	11.25V
		Amp-hour capacity	8.85Ah
		Watt-hour capacity	100Wh
	Temperature	**Operating (Charging)**	32° to 113° F (0° to 45° C)
		Operating (Discharging)	14° to 122° F(-10° to 50° C)
		Non-operating	-4° to 122° F (-20° to 50° C)
	Battery Re-Charge Time	**System in OFF or Standby Mode**	3.5 to 5 hours
		System ON	4 to 7 hours
	Fuel Gauge LED	Yes	
	Warranty	1 year	
	Compatible with optional Travel Battery	No	

Optional HP ST09 Extended Life Notebook Battery ("Travel Battery") (secondary battery)	**Dimensions** (H x W x L)	1.2 x 6.1 x 12 in (3x15.5x30.5cm)	
	Weight (max)	1.2lb, (.550kg)	
	Cells/Type	Lithium-Ion Polymer	
	Energy	**Voltage**	11.1V
		Amp-hour capacity	6.6Ah
		Watt-hour capacity	73Wh
	Temperature	**Operating (Charging)**	32° to 113° F (0° to 45° C)
		Operating (Discharging)	14° to 122° F(-10° to 50° C)
		Non-operating	-4° to 122° F (-20° to 50° C)
	Battery Re-Charge Time	**System in OFF or Standby Mode**	3.5 to 5 hours
		System ON	4 to 7 hours
	Fuel Gauge LED	Yes	
	Warranty	1 year	
	Compatible with optional Travel Battery	Yes	

ENVIRONMENTAL

Environmental Data	**Eco-Label Certifications & declarations**	This product has received or is in the process of being certified to the following approvals and may be labeled with one or more of these marks: • IT ECO declaration • US ENERGY STAR® • EPEAT Gold where HP registers Commercial Notebook products. See http://www.epeat.net for registration status in your country.
	System Configuration	The configuration used for the Energy Consumption and Declared Noise Emissions data for the Notebook model is based on a “Typically Configured Notebook”.

Energy Consumption (in accordance with US ENERGY STAR® test method)	115VAC, 60Hz	230VAC, 50Hz	100VAC, 60Hz
Normal Operation (Short idle)	15.44 W	15.11 W	15.56 W
Normal Operation (Long idle)	7.64 W	7.00 W	6.71 W
Sleep	1.11 W	1.34 W	1.09 W
Off	0.33 W	0.56 W	0.32 W

NOTE:
Energy efficiency data listed is for an ENERGY STAR® compliant product if offered within the model family. HP computers marked with the ENERGY STAR® Logo are compliant with the applicable U.S. Environmental Protection Agency (EPA) ENERGY STAR® specifications for computers. If a model family does not offer ENERGY STAR® compliant configurations, then energy efficiency data listed is for a typically configured PC featuring a hard disk drive, a high efficiency power supply, and a Microsoft Windows® operating system.

Heat Dissipation*	115VAC, 60Hz	230VAC, 50Hz	100VAC, 60Hz
Normal Operation (Short idle)	53 BTU/hr	52 BTU/hr	53 BTU/hr
Normal Operation (Long idle)	26 BTU/hr	24 BTU/hr	23 BTU/hr
Sleep	4 BTU/hr	5 BTU/hr	4 BTU/hr
Off	1 BTU/hr	2 BTU/hr	1 BTU/hr

***NOTE:** Heat dissipation is calculated based on the measured watts, assuming the service level is attained for one hour.

Declared Noise Emissions (in accordance with ISO 7779 and ISO 9296)	Sound Power (L_{WAd}, bels)	Sound Pressure (L_{pAm}, decibels)
Typically Configured – Idle	3.1	24
Fixed Disk – Random writes	3.0	24

Longevity and Upgrading This product can be upgraded, possibly extending its useful life by several years. Upgradeable features and/or components contained in the product may include:

- 4 USB ports
- 1 Thunderbolt port
- 1 ExpressCard/54 slot
- 1 Smart card reader
- 2 SODIMM memory slots (Dual-core processor)
- 4 SODIMM memory slots (Quad-core processor)
- Optional expansion base docking station

Spare parts are available throughout the warranty period and or for up to

5 years after the end of production.

Batteries

This battery(s) in this product comply with EU Directive 2006/66/EC

Batteries used in the product do not contain:
Mercury greater the1ppm by weight
Cadmium greater than 20ppm by weight

Battery size: CR2025 (coin cell)
Battery type: Lithium
Battery size: 6-cell high capacity Lithium-Ion battery (optional 8 cell available)
Battery type:

Additional Information

- This product is in compliance with the Restrictions of Hazardous Substances (RoHS) directive - 2011/65/EC.
- This HP product is designed to comply with the Waste Electrical and Electronic Equipment (WEEE) Directive – 2002/96/EC.
- This product is in compliance with California Proposition 65 (State of California; Safe Drinking Water and Toxic Enforcement Act of 1986).
- This product is in compliance with the IEEE 1680 (EPEAT) standard at the Gold level, see www.epeat.net
- Plastics parts weighing over 25 grams used in the product are marked per ISO11469 and ISO1043.
- This product contains 2.9 % post-consumer recycled plastic (by wt.)
- This product is 95.3 % recycle-able when properly disposed of at end of life.

Packaging Materials

External:	PAPER/Corrugated	380 g
	PAPER/Paper	98 g
Internal:	PLASTIC/EPE (Expanded Polyethylene)	45 g
	PLASTIC/Polyethylene low density	22.7 g

The PAPER/Corrugated packaging materials contains at least 82% recycled content.

The PAPER/Paper packaging materials contains at least 82% recycled content.

The PLASTIC/EPE (Expanded Polyethylene) foam packaging material is made from 0 % recycled content.

The PLASTIC/Polyethylene low density foam packaging material is made from 0 % recycled content.

Material Usage

This product does not contain any of the following substances in excess of regulatory limits (refer to the HP General Specification for the Environment at http://www.hp.com/hpinfo/globalcitizenship/environment/pdf/gse.pdf):

- Asbestos
- Certain Azo Colorants
- Certain Brominated Flame Retardants – may not be used as flame retardants in plastics

- Cadmium
- Chlorinated Hydrocarbons
- Chlorinated Paraffins
- Formaldehyde
- Halogenated Diphenyl Methanes
- Lead carbonates and sulfates
- Lead and Lead compounds
- Mercuric Oxide Batteries
- Nickel – finishes must not be used on the external surface designed to be frequently handled or carried by the user.
- Ozone Depleting Substances
- Polybrominated Biphenyls (PBBs)
- Polybrominated Biphenyl Ethers (PBBEs)
- Polybrominated Biphenyl Oxides (PBBOs)
- Polychlorinated Biphenyl (PCB)
- Polychlorinated Terphenyls (PCT)
- Polyvinyl Chloride (PVC) – except for wires and cables, and certain retail packaging has been voluntarily removed from most applications.
- Radioactive Substances
- Tributyl Tin (TBT), Triphenyl Tin (TPT), Tributyl Tin Oxide (TBTO)

Packaging Usage

HP follows these guidelines to decrease the environmental impact of product packaging:

- Eliminate the use of heavy metals such as lead, chromium, mercury and cadmium in packaging materials.
- Eliminate the use of ozone-depleting substances (ODS) in packaging materials.
- Design packaging materials for ease of disassembly.
- Maximize the use of post-consumer recycled content materials in packaging materials.
- Use readily recyclable packaging materials such as paper and corrugated materials.
- Reduce size and weight of packages to improve transportation fuel efficiency.
- Plastic packaging materials are marked according to ISO 11469 and DIN 6120 standards.

End-of-life Management and Recycling

Hewlett-Packard offers end-of-life HP product return and recycling programs in many geographic areas. To recycle your product, please go to: http://www.hp.com/go/reuse-recycle or contact your nearest HP sales office. Products returned to HP will be recycled, recovered or disposed of in a responsible manner.

The EU WEEE directive (2002/95/EC) requires manufacturers to provide treatment information for each product type for use by treatment facilities. This information (product disassembly instructions) is posted on the Hewlett Packard web site at: http://www.hp.com/go/recyclers. These instructions may be used by recyclers and other WEEE treatment facilities as well as HP OEM customers who integrate and re-sell HP equipment.

Hewlett-Packard Corporate Environmental Information	For more information about HP's commitment to the environment: Global Citizenship Report http://www.hp.com/hpinfo/globalcitizenship/gcreport/index.html Eco-label certifications http://www8.hp.com/us/en/hp-information/environment/ecolabels.html ISO 14001 certificates: http://www.hp.com/hpinfo/globalcitizenship/environment/pdf/PC_GBU_Product_Design_ISO_14K_Certificate.pdf and http://www.hp.com/hpinfo/globalcitizenship/environment/pdf/cert.pdf

COUNTRY OF ORIGIN

China

Options and Accessories (sold separately and availability may vary by country)

Type	Description	Part #
Memory	HP 4 GB DDR3L-1600 1.35V SODIMM	H6Y75AA#xxx
	HP 8 GB DDR3L-1600 1.35V SODIMM	H6Y77AA#xxx
Cases	HP Business Top Load Case (fits up to 15.6")	H5M92AA
	HP Business Backpack (fits up to 17.3")	H5M90AA
	HP Essential Top Load Case (up to 15.6")	H2W17AA#xxx
	HP Professional Leather Case (up to 17.3")	H4J94AA
	HP Business 4 Wheel Roller Case (fits up to 17.3")	H5M93AA
Docking	HP Adjustable Dual Monitor Stand	AW664AA#xxx
	HP Adjustable Display Stand	AW663AA#xxx
	HP 230W Docking Station	A7E34AA#xxx
	HP 120W Advanced Docking Station	A7E36AA#xxx
	HP 230W Advanced Docking Station	A7E38AA#xxx
Input/Output - Mice	HP Wireless Mobile Mouse	H2L63AA
	HP Stylish USB KB/Mouse	H4B80AA#xxx
Adapters	HP 90W Slim AC Adapter	H6Y83AA#xxx
	HP 150W Smart AC Adapter (slim)	AL192AA#xxx
	HP 90W Slim Combo Adapter w/USB Adapter	H6Y84AA#xxx
Storage - External Storage	HP External USB Optical Drive (expected availability 10/1/13)	F2B56AA#xxx
Batteries	HP ST09 Extended Life Notebook Battery	QK639AA
	HP BB09 Ultra Extended Life Notebook Battery	QK640AA
	HP AR08XL Notebook Battery	E7U26AA
Health and Education	HP 20-Notebook Managed Charging Cart	QL489AA#xxx
	HP 20-Notebook Charging Cart	QL488AA#xxx
	HP 30-Notebook Managed Charging Cart	QL490AA#xxx
	HP 30-Notebook Charging Cart	H4F31AA#xxx
Security	HP Docking Station Cable Lock	AU656AA#xxx
	HP UltraSlim Keyed Cable Lock	H4D73AA
Wireless	HP hs3110 HSPA+ Mobile Module	E5M76AA
	HP lt4112 LTE/HSPA+ 4G Mobile Module (EMEA, APJ only)	E5M74AA

NOTE: External power supplies, power cords, cables and peripherals are not low halogen. Service parts obtained after purchase may not be low halogen.

Summary of Changes

Date of change:	Version History:		Description of change:
	From v1 to v2		
June 18, 2014	From v9, to v10	Changed	Dimensions revision
		Added	Secondary IDPubnumber
March 1, 2015	From v10 to v11	Changed	Preinstalled and Supported OS, Industry Certification notes rearranged
April 1, 2015	From v11 to v12	Added	Note for Optimus/Enduro for DreamColor displays and Battery life in Overview section, Smart Card Reader FIPS 201 compliance
		Changed	Memory nomenclature
June 1, 2015	From v12 to v13	Changed	Environmental, Longevity and Upgrading subsection
September 3, 2015	From v13 to v14	Removed	M.2 Z Turbo support and specs
October 16, 2015	From v14 to v15	Changed	Full 4K Supports resolutions in Features, DisplayPort in Display section

Copyright © 2015 Hewlett-Packard Development Company, L.P.

All rights reserved. All trademarks are the property of their respective owners. Intel, Core, and Celeron are registered trademarks or trademarks of Intel Corporation in the U.S. and/or other countries. Bluetooth is a registered trademark of Bluetooth SIG, Inc., in the U.S. and other countries. Adobe is a trademark of Adobe Systems Incorporated. All other product names mentioned herein may be trademarks of their respective companies.

The information contained herein is subject to change without notice and is provided "as is" without warranty of any kind. The warranties for HP products are set forth in the express limited warranty statements accompanying such products. Nothing herein should be construed as constituting an additional warranty. HP shall not be liable for technical or editorial errors or omissions contained herein.