Overview

HP ElitePad Mobile POS Charging Dock
(G8C11AA#XXX)

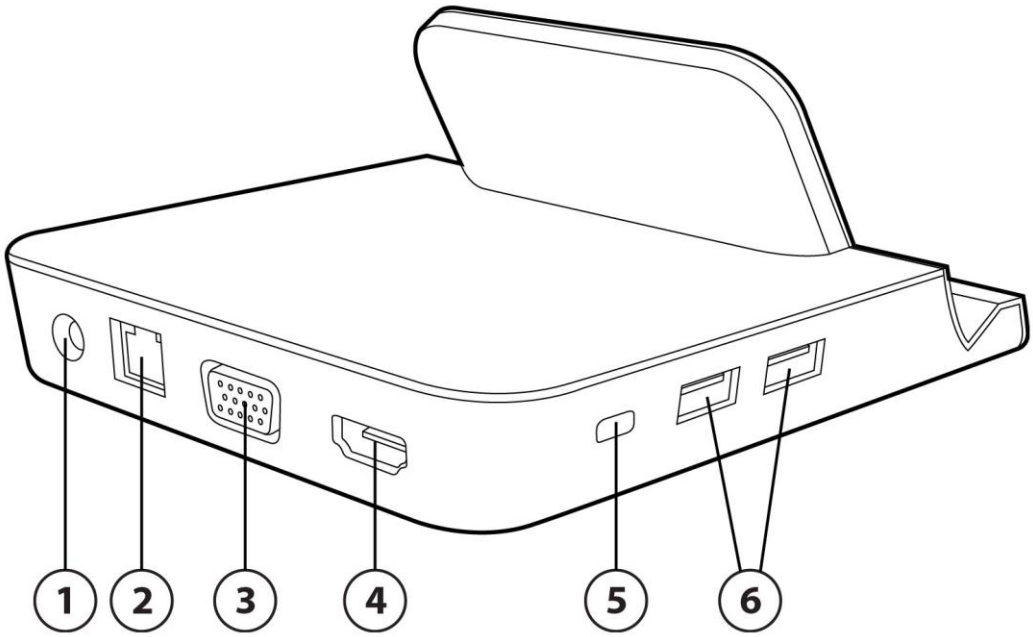

Back:
1. AC Adapter
2. RJ-45
3. VGA
4. HDMI

Side:
5. Security lock slot
6. USB 2.0 and Power-USB 2.0

Side (not shown):
7. USB 2.0
8. USB 2.0
9. Charge LED

Technical Specifications

The HP ElitePad Mobile POS Solution is designed to look great, built to last, and works dependably everywhere from the store floor to the back room. It also can be used to assist store management with internal communication, reporting, and workforce management, bringing the store experience, both front end and back, to the next level. The HP Retail Jacket features a fully integrated design with built-in POS functionalities and when coupled with the ElitePad, allows associates to accelerate checkout, increase sales, and respond more quickly to customers. The HP ElitePad Mobile POS Charging Dock keeps the Mobile POS Solution charged and ready to go.

HP ElitePad Mobile POS Charging Dock

Dimensions (H x W x D)	4.83 x 5.34 x 2.24 in (122.8 x 135.7 x 57 mm)	
Weight	1.48 lb (670 g)	
USB ports	(3) USB 2.0 ports, (1) Power-USB 2.0 port	
Audio connectors	Combo stereo/headphone jack	
Other connectors	(1) HDMI, (1) VGA, (1) RJ-45, (1) Smart AC adapter, (1) charge LED	
Security features	Security lock slot	
Stand-alone power requirements	**Normal Operating Voltage**	19.5 V
	Average Operating Power	8.5 W
	Max Operating Power	< 40 W
Temperature	**Operating**	32° to 95° F (0° to 35° C)
	Non-operating	4° to 140° F (-20° to 60° C)
Relative humidity	**Operating**	10% to 90%, relative humidity
	Non-operating	5% to 90% relative humidity, 101.6° F (38.7° C) maximum wet bulb temperature
Altitude	**Operating**	-50 to 10,000 ft (-15.24 to 3,048m)
	Non-operating	-50 to 40,000 ft (-15.24 to 12,192 m)
Shock	**Operating**	N/A
	Non-operating	200 G, 2 ms, half-sine
Random vibration	**Operating**	N/A
	Non-operating	10-500 Hz, 1.0 grms
Option kit contents	HP ElitePad Mobile POS Docking Station, 40W Smart AC adapter, power cord, documentation	
Compatibility	HP ElitePad Mobile POS Solution	

Copyright © 2014 Hewlett-Packard Development Company, L.P.

Microsoft and Windows are U.S. trademarks of Microsoft Corporation. Intel and Atom are registered trademarks or trademarks of Intel Corporation in the U.S. and/or other countries. Bluetooth is a registered trademark of Bluetooth SIG, Inc., in the U.S. and other countries. Corning and Gorilla are registered trademarks of Corning in the U.S. and/or other countries. The information contained herein is subject to change without notice and is provided "as is" without warranty of any kind. The warranties for HP products are set forth in the express limited warranty statements accompanying such products. Nothing herein should be construed as constituting an additional warranty. HP shall not be liable for technical or editorial errors or omissions contained herein.

Date of change:	**Version History:**		**Description of change:**
June 04, 2014	April 2014	Changed	
		Added	ID PubNumber
		Removed	
July 15, 2014	From v1 to v2	Changed	
		Added	SKU number, version number
		Removed	